PHILIPS

service manual

compact dual-trace sampling oscilloscope PM 3400

9499 034 00 . .

9499 440 06611

1/171/01/02/03

Contents

VIII. CIRCUIT DESCRIPTION 41
A. Trigger and time-base circuits 41
1. Trigger and hold-off circuits 41
2. Fast-ramp generator 41
3. Comparator 42
4. Pulse generator 42
B. Staircase generator 42
1. Pump and staircase circuit 42
2. Blanking mixer 43
3. Time-scale magnifier and time position 43
C. Sampling pulse generator 43
D. Trigger take-off 43
E. High-frequency compensation 43
F. Sampling gate 44
G. Sampling amplifier 44
1. Biasing of the sampling diodes 44
2. Bridge network and position amplifier 44
3. Pre-amplifier 46
4. Amplifier 46
5. Memory gate and memory-gate driver 46
6. Memory 46
7. Feedback and smoothing 46
H. Mixer/deflection amplifier 47
1. Driver time-delay 47
2. Dual-trace multivibrator, differential amplifiers A&B, output amplifier Y 47
3. Trace alignment 47
4. X output amplifier 48
J. ± 24 V stabilising circuits 48
1. Stabilising 48
2. Overload protection 48
K. +70 V and +6.3 V stabilising circuits 49
L. High voltage power supply 49
M. Low voltage rectifier 50

IX. GAINING ACCESS TO PARTS 51
A. Removing the housing 51
B. Removing the knobs 51
C. Removing the c.r.t. bezel 51
D. Removing the EHT plug 51
E. Removing the c.r.t. 51
F. Mounting a new c.r.t. 51
G. Removing the handle 52
H. Removing printed-wiring cards 1...5 and 8 52
J. Removing printed-wiring cards 6 and 7 52
K. Inserting printed wiring cards 1...8 52
L. Removing printed circuit cards 10 53
M. Removing printed-circuit card 13 53
N. Removing the sampling head 53
O. Fitting the sampling head 54
P. Gaining access to the sampling diodes 54
Q. Dismantling the sampling head 54
R. Gaining access to the trigger take-off transformer 54

X. SURVEY OF EQUIPMENT REQUIRED FOR CHECKING, ADJUSTING AND FAULT FINDING 55

XI. CHECKING AND ADJUSTING 56
1. PM 3400-1, Trigg./time base 56
1.1. Equipment required 56
1.2. Preliminary settings of the PM 3400 controls 56
1.3. Adjusting 56
1.3.1. Input signal 56
1.3.2. Adjusting RV102, TRIGG. T.D. BIAS 56
1.3.3. Adjusting RV101, SYNC. BAL. T.D. BIAS 56
1.3.4. Adjusting RV103, MEMORY T.D. BIAS 56
1.3.5. Adjusting RV105, COMPARATOR T.D. BIAS 56
1.3.6. Adjusting RV104, PULSE WIDTH 57
1.3.7. Checking the amplitude of the CAL./TRIGG. pulse 57
1.3.8. Checking the triggering stability 57
1.3.9. Checking the tunnel diodes on circuit board 1 57
2. PM 3400-2, staircase generator 58
2.1. Equipment required 58
2.2. Preliminary settings of the PM 3400 controls 58
2.3. Adjusting 58
2.3.1. Adjusting RV201, DELAY ZERO 58
2.3.2. Checking the inter-dot blanking circuits 58
2.3.3. Checking the sampling density 58
2.3.4. Checking the horizontal modes of switch S5 58
2.3.5. Checking the staircase synchronisation 58
3. PM 3400-3, mixer/defl. ampl. 58
3.1. Equipment required 58
3.2. Preliminary settings of the PM 3400 controls 58
3.3. Checking and adjusting 58
3.3.1. Horizontal trace alignment 58

3.3.2. Vertical trace alignment 58
3.3.3. Adjusting RV305, X GAIN, and RV310, X POSITION 59
3.3.4. Adjusting RV307, B GAIN 59
3.3.5. Adjusting, RV303, Y GAIN 59
3.3.6. Adjusting RV309, A GAIN 59
3.3.7. Adjusting RV308, A BALANCE 59
3.3.8. Adjusting RV306, B BALANCE 59
3.3.9. Checking the A-B BALANCE 59
3.3.10. Adjusting RV304, A+B BALANCE 59
3.3.11. Checking the driver time delay circuit 59
4. PM 3400-4, ± 24 V STAB, and PM 3400-5, +70/6.3V STAB 59
4.1. Equipment required 59
4.2. Adjusting 59
4.2.1. Adjusting RV401, +24 V 59
4.3. Measuring the ripple of the stabilised voltages 60
4.3.1. Ripple of the +24 V stabilised voltage 60
4.3.2. Ripple of the —24 V stabilised voltage 60
4.3.3. Ripple of the +70 V stabilised voltage 60
4.3.4. Ripple of the +6.3 V stabilised voltage 60
4.4. Checking the overload protection circuits 60
4.4.1. +24 V 60
4.4.2. —24 V 60
4.4.3. +70 V 60
4.4.4. +6.3 V 60
5. PM 3400-6, low voltage rectifier 60
5.1. Equipment required 60
5.2. Measuring the ripple of the supply voltages to PM 3400-4 60
5.3. Measuring the ripple of the supply voltages to PM 3400-5 60
6. PM 3400-8, blanking ampl. 60
6.1. Preliminary settings of the PM 3400 controls 60
6.2. Checking and adjusting 61
6.2.1. Adjusting RV803, INTENS. LIMIT 61
6.2.2. Adjusting RV801, ASTIGMATISM 61
7. PM 3400-10 A&B, sampling amplifiers 61
7.1. General 61
7.2. Equipment required 61
7.3. Preliminary settings of the PM 3400 controls 61
7.4. Checking and adjusting 61
7.4.1. Adjusting RV1002, RISE TIME 61
7.4.2. Adjusting RV1005, MEMORY BALANCE 61
7.4.3. Adjusting RV1004, MEMORY GATE WIDTH and RV1003, LOOP GAIN 61
7.4.4. Adjusting RV1001, LOW FREQUENCY COMPENSATION 62
7.4.5. Checking the loop gain at different positions of switch S7A, mV/cm 62
7.4.6. Checking the displayed noise 62
8. Checking and adjusting after replacement of the sampling diodes or the avalanche transistor 62
8.1. General 62
8.2. Equipment required 62
8.3. Preliminary settings of the PM 3400 controls 62
8.4. Checking and adjusting 62
8.4.1. Adjusting RV1301, AVALANCHE VOLTS 62
9. Tangential measurement of noise 62
9.1. General 62
9.2. Equipment required 62
9.3. Measurement procedure 63
10. Checking and adjusting after replacement of circuit board 1 63
10.1. Equipment required 63
10.2. Preliminary settings of the PM 3400 controls 63
10.3. Checking and adjusting 63
11. CHECKING AND ADJUSTING AFTER REPLACEMENT OF THE C.R.T. 64
12. CHECKING AND ADJUSTING AFTER REPLACEMENT OF SWITCH S3, TIME/cm 64
12.1. Equipment required 64
12.2. Preliminary settings of the PM 3400 controls 64
12.3. Checking and adjusting 64
12.3.1. General check of the sweep 64
12.3.2. Adjusting with selected capacitor C22 64
12.3.3. Adjusting capacitor CV1 64
12.3.4. Adjusting capacitor CV2 64
13. Checking the pulse response of the oscilloscope 64
13.1. Equipment required 64
13.2. Preliminary settings of the PM 3400 controls 64
13.3. Checking 64
14. General check 65

14.1. Equipment required 65
14.2. Preliminary settings of the PM 3400 controls 65
14.3. Checking 65

XII. FAULT TRACING ANALYSIS 67

XIII. LIST OF MECHANICAL PARTS 79

XIV. LIST OF ELECTRICAL PARTS 84
A. Resistors 85
B. Variable resistors 87
C. Capacitors 88
D. Variable capacitors 90
E. Miscellaneous 91
1. Coils 91
2. Transformers 91
3. Printed-wiring cards with components 91
4. Assemblies 92
5. C.r.t. and lamps 92
F. Semiconductors 92
1. Transistors 92
2. Selected transistors 93
3. Diodes 93
4. Selected diodes 93
G. Values of C22 93

XV. VERSION PM 3400-01 94

List of figures

VIII-1 Simplified diagram of bridge network and position amplifier 45
VIII-2 Relationship between set bias and rise time 45
VIII-3 Measured signal 45
VIII-4 Simplified diagram of the ±24V stabilising circuit 48
VIII-5 Simplified diagram of the ±24V overload protection circuit 48
IX-1 Removing the knobs 51
IX-2 Removing the c.r.t. 51
IX-3 Removing the c.r.t. 51
IX-4 Removing the c.r.t. 52
IX-5 Removing the printed-wiring cards 52
IX-6 Removing the printed-wiring cards 52
IX-7 Fitting printed-wiring cards 52
IX-8 Fitting printed-wiring cards 52
IX-9 Removing printed-wiring cards 53
IX-10 Removing the sampling head 53
IX-11 Exploded view of the sampling head 54
IX-12 Access to the trigger take-off transformer 54
XI-1 Adjusting RV105, COMP. T.D. BIAS 57
XI-2 Characteristic t.d. curve (static) 57
XI-3 Connection of curve tracer to tunnel diode 57
XI-4 Adjusting the loop gain to 0.95 61
XI-5 Noise measurement: dark band still visible 63
XI-6 Noise measurement: dark band just vanished 63
XI-7 Instrument set-up for measurement of time interval between channels 63
XI-8 Pulse response 65
XI-9 Pulse response 65
XI-10 Pulse response 65
XI-11 Pulse response 65
XII-1-8 Oscillograms 69
XII-9 Extension board 71
XII-10 Fault-tracing diagram 74
XIII-1 Front view showing item numbers 79
XIII-2 Rear view showing item numbers 80
XIII-3 Left-hand side view showing item numbers 81
XIII-4 Right-hand side view showing item numbers 83
XIII-5 Bottom view showing item numbers 83
XV-1 Differences between /01 version and further versions 94
XVI-1 Switch S1, trigger selector 96
XVI-2 Unit PM 3400-1, trigger and time-base circuits 97
XVI-3 Diagram of trigger and time-base circuits 99
XVI-4 Unit PM 3400-2, staircase generator 103
XVI-5 Diagram of staircase generator 105
XVI-6 Unit PM 3400-11, sampling gate 108
XVI-7 Unit PM 3400-13, sampling-pulse generator 108
XVI-8 Unit PM 3400-12, h.f. compensation 109
XVI-9 Diagram of sampling gate, h.f. compensation and pulse generator 110
XVI-10 Unit PM 3400-10, sampling amplifier 112
XVI-11 Diagram of sampling amplifier 115
XVI-12 Unit PM 3400-3,mixer/deflection amplifier 119
XVI-13 Unit PM 3400-9, printed-wiring board 119
XVI-14 Diagram of mixer/deflection amplifier 121
XVI-15 Unit PM 3400-4, ±24 V stabilising unit 124
XVI-16 Diagram of ±24 V stabilising circuit 125
XVI-17 Unit PM 3400-5, +6.3 V & +70 V stabiliser circuits 126
XVI-18 Diagram of +6.3 V & +70 V stabiliser circuits. 127
XVI-19 Unit PM 3400-7, H.T. power supply 128
XVI-20 Unit PM 3400-8, blanking amplifier 129
XVI-21 Diagram of display part 131
XVI-22 Unit PM 3400-6, low-voltage rectifier 134
XVI-23 Diagram of low-voltage rectifier 135

VIII. Circuit description

A. TRIGGER AND TIME-BASE CIRCUITS
(printed-circuit card 1)

This printed-circuit card includes the TRIGGER and HOLD-OFF circuits, the FAST-RAMP GENERATOR, the COMPARATOR and the PULSE GENERATOR. The circuit diagram is shown in Fig. XVI-3.

A. 1. Trigger and hold-off circuits

The triggering signal can be obtained either from one of the trigger take-off transformers T3A or T3B, or else from an external source. It is possible to trigger on both the positive-going and the negative-going edges of the signal.
The circuit diagram shows the TRIGG. selector switched to the -A position, so that the negative-going triggering signals pass through the secondary winding of transformer T2 (50Ω impedance) to the base of transistor Z101. Positive-going triggering signals are supplied to the primary of transformer T2, so that they may be inverted prior to being passed to transistor Z101.
Emitter follower Z101 and two further transistors Z102 and Z103 form a trigger input isolator stage. The trigger multivibrator consists of tunnel diode Z104 and inductance L104. Transistor Z106 forms a low-impedance voltage limiter to drive the tunnel diode.

The trigger multivibrator can be set to either the synchronisation mode or to the triggering mode by means of potentiometer RV1 (SENSITIVITY) and vernier RV2.

In the synchronisation mode, the peak-point current of the tunnel diode is exceeded and the multivibrator becomes free-running. The frequency can be adjusted by means of potentiometers RV1-RV2.

In the triggering mode the current supply for the tunnel diode drops below its peak point so that the multivibrator can be started by trigger pulses only.

The trigger-memory tunnel diode Z105, transistor Z109, and the trigger hold-off circuit (Z110, Z111, Z121, Z123 and Z126) have a gate function which limits the sampling frequency to 100 KHz.

For an explanation of the hold-off circuit operation, assume the following initial conditions:
— there are no triggering signals present,
— RV1 SENSITIVITY is set to position TRIGG.

Tunnel diode Z105 and transistor Z109 are, therefore, both non-conductive, the differential-amplifier transistor Z110 is conducting and its associated transistor Z111 is cut off. Ramp-gate transistor Z128 is fully conducting. Since transistor Z111 is cut off, the hold-off capacitor C111 is charged to approximately + 8.5 V. Transistor Z126, which forms a bistable multivibrator together with transistor Z123, receives its base current via the chain formed by resistor R120, zener diode Z124, and diode Z122. Both transistors are fully conducting, so that transistor Z121 is cut off, making tunnel diode Z105 ready for conduction.

Immediately a trigger pulse starts the trigger multivibrator (Z104-L104) a negative step is fed to tunnel diode Z105 via differentiating network R108-C108. Tunnel diode Z105 conducts and the resulting negative step is fed through transistor Z109 to the base of transistor Z110 and also to the base of ramp-gate transistor Z128. Transistor Z110 cuts off and transistor Z111 starts conducting; the hold-off capacitors will then discharge from + 8.5 V to 0 V. The particular hold-off capacitor (C2, C3, C4, C5, C6 or C7) connected in parallel with C111 is determined by the setting of the TIME/cm switch S3.

As the voltage across the hold-off capacitors approaches zero, diode Z125 starts conducting so that multivibrator Z126-Z123 cuts off and transistor Z121 conducts. The tunnel diode therefore switches back to its initial state due to the loss of the bias current. The negative voltage at the base of transistor Z110 disappears and transistor Z111 cuts off.

The hold-off capacitors are then charged again via R120. When the voltage across the capacitors approaches + 8.5 V, multivibrator Z123-Z126 switches over and transistor Z121 is cut off.

The bias current for tunnel diode Z105 will flow again and the tunnel diode is ready to be switched on by the next negative step from tunnel diode Z104.

A. 2. Fast-ramp generator

The fast-ramp generator consists of ramp gate transistor Z128, constant current source Z127 and, depending on the position of switch S3 TIME/cm, one of the ramp slope capacitors CV1, CV2, C8. . . C22.

Ramp gate transistor Z128 is cut off by the negative step from tunnel diode Z105. The ramp slope capacitors will be charged with a constant

current from transistor Z127 and a linear voltage appears at the collector of transistor Z128.
When the voltage across hold-off capacitors C111, C2. . .C7 has decreased to 0 V, the negative voltage at the base of ramp gate transistor Z128 disappears. The gate opens and the ramp slope capacitors are rapidly discharged.

The fast-ramp voltage is fed directly to the base of comparator transistor Z132.

A. 3. Comparator

The comparator circuit consists of differential amplifier Z132-Z133, tunnel diode Z131 and an output isolator and amplifier transistor Z136.

In the differential amplifier, the fast-ramp voltage is compared with the staircase voltage, which serves as a reference voltage. The fast-ramp voltage is applied to the base of Z132 and the reference voltage to the base of Z133.

In the quiescent state, transistor Z132 is cut off and transistor Z133 carries the current from resistor R140. As soon as the ramp voltage goes more positive than the reference voltage, the current switches over to transistor Z132.

When this current, together with the bias current through RV105 and R139, exceeds the peak point current of tunnel diode Z131, which will switch on. This results in a negative step which is fed to the base of transistor Z136, producing a positive step at its collector.

This pulse is applied to the SAMPLING PULSE GENERATOR, the PUMP circuit and the DRIVER TIME DELAY circuit.

A. 4. Pulse generator

The pulse generator consisting of transistors Z112, Z113, Z116 and Z117, supplies a pulse voltage of + 1.2 V and a pulse width of 1 μs to output socket P2, CAL/TRIGG. OUT.

The pulse generator is triggered by the positive pulses produced at the collector of hold-off transistor Z110. These pulses are applied to the base of transistor Z112, via capacitor C110.

Emitter-coupled monostable multivibrator Z112-Z113 provides the pulse width of 1 μs, adjustable by means of potentiometer RV104. The collector pulses of Z113 switch both amplifier transistors Z116 and Z117 thus improving the shape and rise time of the output pulse.

From the collector of transistor Z117, the output pulses are applied to socket P2, via diodes Z119 and Z120.
The pulse voltage is well-defined (see chapter II, TECHNICAL DATA) and can be used for calibration purposes or for the triggering of external equipment.

B. STAIRCASE GENERATOR (printed-circuit card 2)

This printed-circuit card comprises the PUMP circuit, the STAIRCASE circuit, the BLANKING MIXER, the TIME SCALE MAGNIFIER and the TIME POSITION circuits. The circuit diagram is shown in Fig. XVI-5.

B. 1. Pump and staircase circuit

The positive pulses produced by the comparator stage are applied to the pump circuit, consisting of transistors Z204 and Z201.

Voltage divider R205-R204, capacitor C211 and diode Z203 limit the amplitude of the input pulses to approximately 5 V.

In the quiescent state, transistor Z204 is cut off and transistor Z201 is fully conducting. Transistor Z204 starts conducting upon application of a positive pulse to its base and transistor Z201 is cut off. This state will be maintained for 4 μs, which is the charging time for timing capacitor C203 and also the time required for trace blanking.

The output pulses of the pump circuit are fed via pump diodes Z206 and Z207, to the staircase generator (transistors Z208, Z209, Z210 and Z211).

The matched pair of field-effect transistors Z208 and Z209 forms a differential amplifier. This differential amplifier together with transistors Z210 and Z211 and capacitor C208, forms a Miller integrator.

The pump pulses are passed through the staircase generator and a staircase voltage is built up across Miller capacitor C208.

When switch S5 is at NORMAL, the height of each stairstep is determined by the position of potentiometer RV9A (SAMPLES/cm) which sets the voltage across capacitor C207. The total staircase amplitude of approximately 5.5 V is determined by transistor Z213, which is normally cut off. Transistor Z213 starts conducting when its emitter voltage exceeds its base voltage.

When transistor Z213 starts conducting, bistable multivibrator Z214-Z215 switches over. As a result, transistor Z212 starts conducting and Miller capacitor C208 will discharge.

Transistors Z217 and Z215 form a timing circuit which ensures that the reset time will not be less than 200 μs, thus enabling capacitor C208 to discharge completely before the next sweep starts. From the emitter of Z211 the output voltage is applied to the X deflection circuits on printed-circuit card 3.

When switch S5 is in the MANUAL position, the staircase generator is disconnected. A variable d.c. voltage is applied to the base of transistor Z211, via potentiometer RV9B, MANUAL SCAN, and resistor R20. This voltage is fed to the X deflection circuits on printed-circuit card 3, via the emitter of transistor Z211.

With switch S5 at position EXT., a deflection voltage from an external source can be applied to input P3, X IN. The deflection voltage is fed to the X deflection circuits on printed-circuit card 3 via potentiometer RV9B, that in this case works as an attenuator, resistor R20 and transistor Z211.

When switch S5 is set to SINGLE, the sweep may be started by depressing the SINGLE START push-button S6. Bistable multivibrator Z214-Z215 then switches over, with the result that transistor Z212 is cut off. Capacitor C208 is charged by a d.c. current through SCAN SPEED potentiometer RV9B and the resistors R20, R210 and R211. As soon as the voltage across capacitor C208 reaches the 5.5 V level, transistor Z213 starts conducting and capacitor C208 is short-circuited by transistor Z212. Another sweep can be started by depressing push-button S6, SINGLE START.

B. 2. Blanking mixer

The blanking mixer consists of transistor Z218 and diodes Z219 and Z223.

Negative pulses are fed to the base of transistor Z218 from the collector of pump transistor Z204. Positive blanking pulses taken from the collector of Z218 are applied to the BLANKING AMPLIFIER on printed-circuit card 8. These pulses are used for blanking between the sampling (inter-dot blanking). Positive reset pulses for blanking during the flyback of the c.r.t. spot are supplied by transistor Z214. These pulses are mixed via diode Z223 with the inter-dot blanking pulses from diode Z219 and afterwards applied to the BLANKING AMPLIFIER.

B.3. Time-scale magnifier and Time position

The staircase voltage at the emitter of transistor Z211 is applied to the comparator input on printed-circuit card 1, via resistor R220, potentiometer RV3, attenuator switch S2 TIME SCALE MAGNIFIER, emitter follower Z220, potentiometer RV201 DELAY ZERO, potentiometers RV8-RV7 TIME POSITION, and emitter follower Z222.

The staircase voltage is the reference voltage with which the fast-ramp voltage is compared in the comparator.
The output voltage of the staircase generator and the position of switch S2 TIME SCALE MAGNIFIER determine the voltage at the reference input of the comparator.

The resistive voltage divider on switch S2 attenuates the staircase voltage before it is applied to the base of transistor Z220. Transistor Z221 provides a constant current through potentiometers RV7-RV8 TIME POSITION, resistors R12. . .R17, potentiometer RV201 DELAY ZERO and transistor Z220. The d.c. level of the staircase voltage, (i.e. the horizontal position of the trace) can be changed, by means of potentiometers RV7-RV8. With the switch S201 as shown in the diagram, magnification will take place around the centre of the screen.

If resistors R12. . .R17 are short-circuited by means of switch S201, the trace is magnified around a point 5 mm from the left-hand side of the screen. TIME POSITION potentiometers RV7 (coarse) and RV8 (fine) cause a time delay. With these controls, a displayed waveform can be moved horizontally across the screen. The delay time is not affected by the magnifier.

C. SAMPLING PULSE GENERATOR
(printed circuit card 13)

The circuit diagram is shown in Fig. XVI-9.
A positive pulse from the comparator stage is fed via RC network R1306-C1304 and isolation transformer T1301 to the base of avalanche transistor Z1302.

The avalanche voltage is adjusted by means of potentiometer RV 1301 AVALANCHE VOLTS. Transistor Z 1301 acts as a low-impedance voltage source for the avalanche transistor.
Snap-off diode Z1303 is biased in forward direction by current flowing via potentiometer RV1302 SNAP-OFF CURRENT and resistors R1310, R1311, R1308, R1309, R1302 and R1303.

A positive pulse applied to the base of transistor Z1302 gives rise to two avalanche pulses, a negative one at the collector and a positive one at the emitter. The pulse rise-time is approximately 0.6 ns.

The two pulses cause snap-off diode Z1303 to be reverse-biased and due to the special characteristics of this diode, the pulse rise-time will be shortened to approximately 0.1 ns.

The pulses are differentiated by 2pF capacitors (which are part of the printed wiring) and are fed to the sampling gate on printed-circuit card 11.

D. TRIGGER TAKE-OFF

The circuit diagram is shown in Fig. XVI-9. Channel A is identical to channel B and therefore only channel A is described.

The signal to be sampled is applied to 50 Ω input socket P5A.
The signal passes through the primary winding of trigger take-off transformer T3A. From the secondary winding, part of the signal is fed to trigger selector S1 TRIGG. and further to the trigger circuits on printed-circuit card 1.

E. HIGH-FREQUENCY COMPENSATION
(printed-circuit card 12)

The circuit diagram is shown in Fig. XVI-9. Channel A is identical to channel B and therefore only channel A is described.

The printed-circuit cards 12A and 12B are interchangeable.

From the primary winding of the trigger take-off transformer T3A, the signal travels through a 50 Ω 30 ns delay line DL1A. The delay allows the trigger point to be displayed on the screen.
The high-frequency losses caused by the delay line are compensated for by the network on printed-circuit card 12.

F. SAMPLING GATE (printed-circuit card 11)

The circuit diagram is shown in Fig. XVI-9. Channel A is identical to channel B and therefore only channel A is described.

The printed-circuit cards 11A and 11B are interchangeable.

The positive and negative sampling pulses are applied to sampling diodes Z1202 and Z1201 via symmetry transformer T1101 and capacitors C1102 and C1101. The sampling diodes are reverse-biased in the quiescent state and will conduct when the sampling pulse occurs.

At the instant of sampling, a current flows through the diodes and if the input signal differs from that at the previous sampling, capacitors C1101 and C1102 will be charged. This charge is fed to the sampling pre-amplifier on printed-circuit board 10 via resistors R1101 and R1104.

G. SAMPLING AMPLIFIER (printed-circuit board 10)

The circuit diagram is shown in Fig. XVI-11. Channel A is identical to channel B and therefore only channel A is described.

The printed-circuit boards 10A and 10B are interchangeable.

Printed-circuit board 10 comprises a BRIDGE NETWORK, a POSITION AMPLIFIER, a SAMPLING PRE-AMPLIFIER, SAMPLING AMPLIFIERS and MEMORY circuits.

G.1. Biasing of the sampling diodes

Through resistors R1007, R1008 and winding S2 of transformer T1001, the positive bias voltage for sampling diode Z1201 is fed to the sampling gate on printed-circuit card 11.

The corresponding negative bias voltage for sampling diode Z1202 is fed to the sampling gate, via resistors R1021, R1020 and winding S3 of transformer T1001.

G.2. Bridge network and position amplifier

Between windings S2 and S3 of transformer T1001 a bridge network is inserted, mainly consisting of resistors R1009. . .R1018, capacitors C1003, C1004 and potentiometer RV1002, RISE TIME.

A simplified diagram of the network and the position amplifier is shown in Fig. VIII-1.

The reverse bias to the sampling diodes Z1 and Z2 is fed through resistors R1 and windings S2 and S3 respectively. By adjusting RV1, RISE TIME, the bias of both diodes is changed. Figures VIII-2a, b and c show how the sampling pulse applied to diode Z1 will be displaced when RV 1 is adjusted. The time interval during which the diode is conducting corresponds to the rise time of the oscilloscope.

When the diode is conducting, a low-impedance signal path is opened and the signal will charge capacitor C1 (C2). This charge is distributed to the pre-amplifier via windings of T1001.

The feed-back voltage from the Memory output is applied to the bridge in junction R1017-R1018. These resistors are represented by R2-R2 in the simplified diagram.

As the bridge is floating, a feed-back voltage will change the potential of the whole bridge which causes the reverse bias of the sampling diodes to change. Depending on the signal level at a certain sampling instant with respect to the previous sampling instant, the bridge will be seen as balanced (no output signal) or unbalanced (output signal).

Example: A signal as shown in Fig. VIII-3 is applied to the sampling gate. At quiescent state, the reverse bias of the sampling diodes is + 3 V and —3 V respectively. At sampling instant 1, the input level is 0 V and the feedback voltage from the memory is also zero. At sampling instant 2, the input level is —1 V, but the diode bias is still 3 V. This means that, seen from the sampling gate, the bridge is unbalanced. A charge, proportional to the level difference between sampling instants 1 and 2 will be fed to the pre-amplifier.

At sampling instant 3, the input level is the same as at the previous sampling. The feedback voltage, however, has changed to —1 V, thus changing the bias of the diodes to +2 V and —4 V respectively.

Seen from the sampling gate, the bridge is now balanced and no charge is supplied to the pre-amplifier.

By changing the potential of the whole bridge the trace can be vertically shifted on the CRT screen. This is effected with potentiometer RV11A (B), POSITION, and its vernier RV12A (B). The control voltage from the potentiometer is applied to the bridge in junction R1015-R1016 via resistor R1006, and differential amplifier Z1003-Z1004. This amplifier provides a low-impedance connection to the bridge.

In the simplified diagram, junction R1015-R1016 is represented by R3-R3, and potentiometer RV11 by RV2.

The potential at junction R3-R3 can be changed ±1.6 V with potentiometer RV2. A displacement of the bridge potential implies a vertical shift of the trace on the CRT screen.

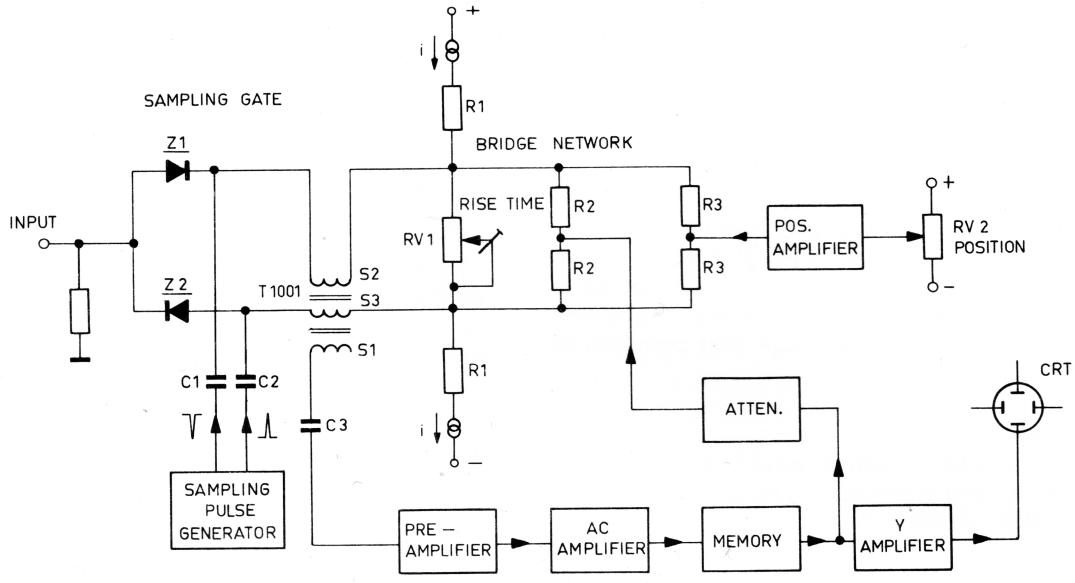

Fig. VIII-1 Simplified diagram of bridge network and position amplifier

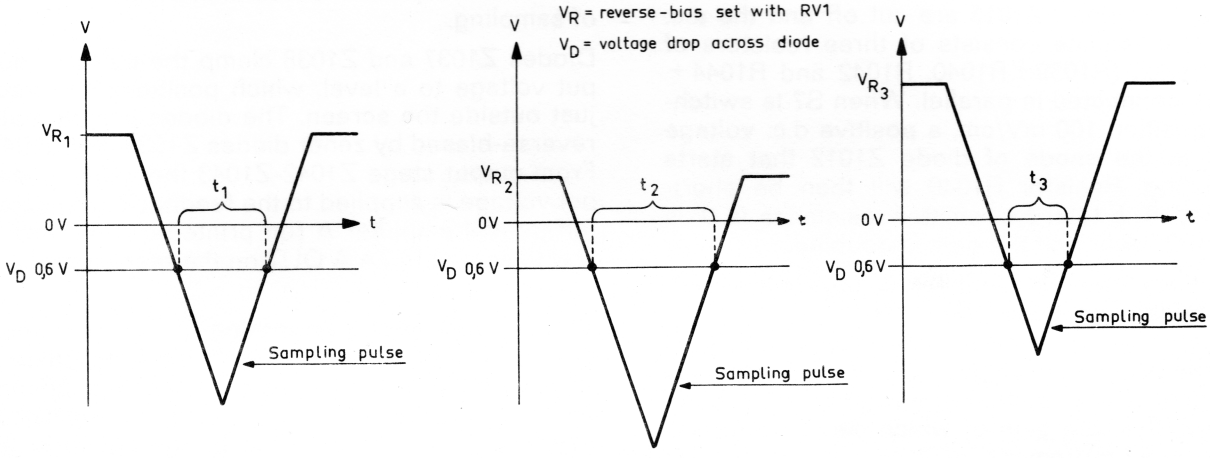

A. Bias normal
t_1 = conducting interval of sampling diode (corresponds to rise time)

B. Bias decreased
$t_2 > t_1$

C. Bias increased
$t_3 < t_1$

Fig. VIII-2 Relationship between set bias and rise time

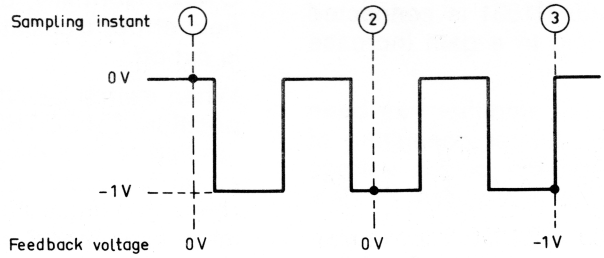

Fig. VIII-3 Measured signal

G.3. Pre-amplifier

The charge of sampling capacitors C1101 and C1102 is supplied via transformer T1001 to the pre-amplifier which is a charge amplifier consisting of transistors Z1005, Z1006 and Z1007. A corresponding charge is stored in feedback capacitor C1009.

The pre-amplifier compensates for the charge which is lost in the capacitances of the sampling diodes. A compensation signal from printed-circuit card 12 is fed to the pre-amplifier, via potentiometer RV1001 LOW FREQUENCY COMPENSATION. The compensated sampling pulse is applied via complementary transistors Z1009 and Z1008 to the first amplifier stage that consists of transistor Z1010.

G.4. Amplifier

This is a selective amplifier, tuned to approximately 700 kHz, and consists of transistors Z1010, Z1011, Z1016, Z1017, Z1018, Z1019, Z1025 and Z1026.

From the emitter of transistor Z1010 the signal is fed to the base of transistor Z1011. The emitter resistance of the latter and thus the gain of the amplifier can be changed by means of switch S7 mV/cm.

Example: In position 200 mV/cm of switch S7, diodes Z1012 and Z1013 are cut off and the a.c. emitter resistance consists of three resistors of 10 kΩ each (R1039+R1040, R1042 and R1044+R1045), connected in parallel. When S7 is switched to position 100 mV/cm, a positive d.c. voltage is fed to the anode of diode Z1012 that starts conducting. Resistor R1040 will then be short-circuited. The total a.c. emitter resistance is thus a factor 2 lower and the gain is doubled.

At the same time the feedback voltage is attenuated by resistive network R36. . .R44.
The signal is fed from the collector of Z1011 to the base of emitter follower Z1016. Subsequently the signal is fed to operational amplifier Z1017-Z1018-Z1019, the gain of which can be adjusted by switch S7 mV/cm.

The gain is determined by the ratio between the feedback resistance and the input resistance. When e.g. switch S7 occupies position 200 mV/cm, diode Z1014 is conductive and diode Z1015 is cut off; resistor R1050 then represents the input resistance. If S7 is switched to position 20 mV/cm, a positive d.c. voltage is applied to diode Z1015, causing the latter to become conductive.

Z1014 is cut off and resistor R1051 is connected in parallel to R1050, resulting in a gain increase of ten times.

The output of the operational amplifier has been provided with an amplitude limiter consisting of diodes Z1020. . .Z1023. Thus the output voltage is limited to the voltage drop across two diodes.

The last amplifier stage Z1025-Z1026 is a stabilised feedback amplifier. The output current at the collector of Z1026 charges capacitor C1029.

G.5. Memory gate and memory-gate driver

The charge of capacitor C1029 is applied to the source of field-effect transistor Z1030. This transistor (the memory gate) is normally cut off and can be made conductive by pulses from memory-gate driver Z1028-Z1029.

This monostable multivibrator is triggered by pulses from the DRIVER TIME DELAY circuit on printed-circuit card 3. The trigger pulses are delayed so that the memory gate opens at the right time.

The output pulses of the multivibrator are applied to the gate of field-effect transistor Z1030. The pulse width and thus the period of time that the memory gate is open, can be adjusted with potentiometer RV1004 MEMORY-GATE WIDTH.

G.6. Memory

The signal is applied via the memory gate to the memory circuit. The memory consists of matched field-effect transistor pair Z1032-Z1033, amplifier transistor Z1034 and output transistors Z1042 and Z1043. The memory is in fact a Miller integrator. Miller capacitor C1032 realises capacitive feedback from junction R1084-R1085 to the gate of field-effect transistor Z1032.

The charge supplied via the memory gate is stored in Miller capacitor C1032 until the next moment of sampling.

Diodes Z1037 and Z1038 clamp the memory output voltage to a level, which positions the trace just outside the screen. The diodes are normally reverse-biased by zener diodes Z1039 and Z1040. From output stage Z1042-Z1043 the memory output voltage is supplied to the feedback attenuator, differential amplifier A (on printed-circuit card 3) and to socket P12A A OUT on the rear panel.

G.7. Feedback and smoothing

The feedback voltage is taken off from junction R1084-R1085 and attenuated in sections 2R and 2F of switch S7 mV/cm. Prior to being applied to junction R1017-R1018 of the bridge network, the feedback voltage is delayed by LC-network L1001-L1002-C1005. By this time delay the amplifier feedback-loop is stabilised during the time that the memory gate is open.

The loop gain of the feedback amplifier is normally unity. By decreasing the loop gain, the signal-to-noise ratio can be improved.

This is effected by the circuit consisting of field-effect transistor Z1031, diode Z1036 and capacitor C1033. Normally, diode Z1036 is conductive and field-effect transistor Z1031, acting as a switch, is cut off.

When switch S9 NORMAL/SMOOTHED is set to position SMOOTHED, a positive d.c. voltage is applied to the diode, causing the cut off. Field-effect transistor Z1031 then conducts, with the result that capacitor C1033 is connected in parallel to capacitor C1032. The increase of the capacitance reduces the loop gain to approximately 1/3 and the random noise is reduced.

When the loop gain is less than unity, more samples per centimetre are required to ensure a correct reproduction of the input waveform.
With only a few samples per centimetre, the shoulder of a displayed square-wave signal is likely to be rounded.

H. MIXER/DEFLECTION AMPLIFIER (printed-circuit card 3)

The circuit diagram is shown in Fig. XVI-14.

Printed-circuit card 3 compiles a DRIVER TIME-DELAY circuit, a DUAL-TRACE multivibrator, DIFFERENTIAL AMPLIFIERS A and B, OUTPUT AMPLIFIERS X and Y, and TRACE ROTATION circuits.

H.1. Driver time-delay

The comparator pulses are fed to driver transistor Z301 and trigger a monostable multivibrator, consisting of transistors Z303 and Z304.

The delayed output pulses at the emitter of transistor Z303 are supplied to the memory-gate driver on printed-circuit board 10.

The pulses at the collector of transistor Z304 are supplied to bistable multivibrator Z307-Z308, via switching transistor Z306.

H.2 Dual-trace multivibrator, differential amplifiers A and B, output amplifier Y

Switching between the differential amplifiers A (Z325-Z326) and B (Z327-Z328) is effected by dual-trace multivibrator Z307-Z308.

The signal from memory A (printed-circuit board 10) is fed to the base of transistor Z325 via potentiometer RV10A A VARIABLE. The signal from memory B is fed to the base of transistor Z327, via potentiometer RV10B B VARIABLE.

The vertical-deflection modes can be selected with switch S8.

In positions **A+B** and **A—B**, the switching transistor Z306 is turned off.

Consequently, the output pulses of monostable multivibrator Z303-Z304 cannot trigger dual-trace multivibrator Z307-Z308. However, a positive d.c. voltage, supplied via sections 1F and 1R of switch S8, is applied to the bases of Z307 and Z308. These transistors are then turned off, which causes the switching diodes Z318 and Z319 of differential amplifier A, and Z322 and Z323 of differential amplifier B, to be cut off. The A and B signals can pass the differential amplifiers and are applied to the Y output amplifier.

In position **A—B**, the signal is inverted on sections 2F and 2R of switch S8.

In position **A**, only transistor Z308 of the dual-trace multivibrator receives a positive base voltage via section 1F of switch S8. Thus transistor Z308 is still turned off and transistor Z307 conducts. As a result, diodes Z318 and Z319 of differential amplifier A are cut off, but diodes Z322 and Z323 of differential amplifier B are conductive. Therefore the B signal is short-circuited to +24 V, via diodes Z322 and Z323, transistor Z307 and zener diode Z311.

In position **B**, transistor Z307 of the dual-trace multivibrator is turned off, but Z308 is fully conducting. Consequently, the A signal is short-circuited to +24 V, via diodes Z318 and Z319, transistor Z308 and zener diode Z311.

In positions **A and B** and **A and —B** a positive d.c. voltage, supplied via section 1F of switch S8, is applied to switching transistor Z306, causing it to conduct. The output pulses of monostable multivibrator Z303-Z304 can pass through transistor Z306, and trigger the dual-trace multivibrator via gating diodes Z309 and Z310.

As appears from the description above, switching the dual-trace multivibrator involves a corresponding switching of the differential amplifiers A and B. Thus, the A and B signals are displayed at alternating sampling instants.

In position **A and —B**, the B signal is inverted on sections 2F and 2R of switch S8, before it is applied to the Y output amplifier.

In position **A VERT. B HOR.**, monostable multivibrator Z303-Z304 is disconnected and a positive d.c. voltage is applied to the base of transistor Z308 of the dual-trace multivibrator. The A signal is applied to Y output amplifier Z313-Z314 via differential amplifier A.

The B signal from differential amplifier B is fed to X output amplifier Z339-Z340 via sections 2F and 2R of switch S8.

Transistors Z329 and Z330 are constant-current sources for diffferential amplifiers A and B.

The balance and the gain of differential amplifier A (B) are adjusted with potentiometers RV308 A BALANCE (RV306 B BALANCE) and RV309 A GAIN (RV307 B GAIN).

The Y output amplifier is balanced with potentiometer RV304 Y BALANCE and its gain can be adjusted with potentiometer RV303 Y GAIN.
The Y output signals are fed to the c.r.t. deflection plates via printed-circuit board 9.

H.3. Trace alignment

The signals from the A and/or B differential amplifiers are applied to differential amplifier Z331-Z332. The combined Y signal at the collector of transistor Z331 is available on output socket P14 Y OUT.

The Y signal at the collector of transistor Z332 is fed to differential amplifier Z333-Z334, via balancing potentiometer RV302 VERT. TRACE ALIGN. When the differential amplifier is in equilibrium, there is no output signal. When, however, RV302 is adjusted, a small part of the Y signal passes through the amplifier and is applied to X output amplifier Z337. . .Z340. Thus, the trace on the c.r.t. screen can be aligned with respect to the vertical axis of the internal graticule.

In the same way, the horizontal trace can be aligned with respect to the horizontal axis of the graticule by adding part of the X signal to the Y signal in the Y output amplifier. In differential amplifier Z335-Z336, the base voltage of transistor Z336 is constant because resistors R349 and R350 are equal in value. A difference voltage can be applied to the base of transistor Z335, via potentiometer RV301 HOR. TRACE ALIGN. The outputs of the differential amplifier have been connected to the Y output amplifier, where the X signal is added to the Y signal.

H.4. X output amplifier

The staircase voltage from the staircase generator on printed-circuit card 2 is applied to the base of transistor Z345 which forms the X differential amplifier in conjunction with transistor Z346. Transistor Z347 supplies a constant current for the amplifier.

The outputs of the differential amplifier have been connected to the X output amplifier Z337. . .Z340. After amplification, the X signal is fed to the X deflection plates, via printed-circuit board 9.

In position **A VERT. B HOR.** of switch S8, a positive d.c. voltage is applied to the collectors of transistors Z345 and Z346, via diodes Z342 and Z343. These diodes carry the current through the differential amplifier and the staircase voltage is disconnected. The B signal is applied to the X output amplifier in the previously described way.

Horizontal positioning of the trace is effected with potentiometer RV310 X POSITION.

J. ±24 V STABILISING CIRCUITS (printed-circuit card 4)

The circuit diagram is shown in Fig. XVI-16.

Simplified diagrams of the stabilising circuits and the overload protection circuits are shown in Fig. VIII-4 and VIII-5.

J.1. Stabilising

A rectified and smoothed voltage of +35 V is supplied by the low voltage rectifier on printed-circuit card 4. This voltage is applied to the output terminals of this card, via transistor Z3.

Stabilising is effected by comparing the output voltage with a reference voltage, in differential amplifier Z405-Z406.

The reference voltage is obtained from zener diodes Z407 and Z408.

The current through transistor Z3 is controlled by the output voltage of the differential amplifier. The stabilised output voltage, determined by the reference voltage and voltage divider R406, RV401 and R407 can be acurately adjusted with potentiometer RV401.

If the supply voltage of +24 V increases due to a load variation, the base voltage of Z405 also increases. The current through this transistor increases, resulting in a decrease of the collector voltage. This voltage decrease is fed to the output of the unit through power transistor Z3.

Thus, the variations of the output voltage are counteracted.

When the oscilloscope is switched on, the ±24 V unit has to start supplying before the auxiliary voltage of +70 V is available from the stabilising unit on printed-circuit card 5.

Therefore, the +35 V from the low voltage power supply is first applied to the collector of transistor Z405, via diode Z404 and resistor R408.

When the unit has started supplying the ±24 V, the +70 V will be present at R408 and the diode stops conducting.

J.2. Overload protection

Under normal operating conditions (i.e. at nominal value of load resistor R_l) point A is negative with respect to point B (Fig. VIII-5) and transistor Z403 is cut off. The current through power transistor Z3 is then completely determined by the output voltage of differential amplifier Z405-Z406.

As soon as the load current increases, the voltage drop across resistor R405 increases. The voltage at point A becomes more positive, whereas the

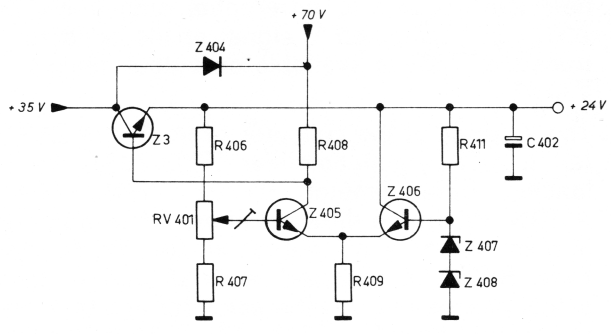

Fig. VIII-4 Simplified diagram of the ±24V stabilising circuit

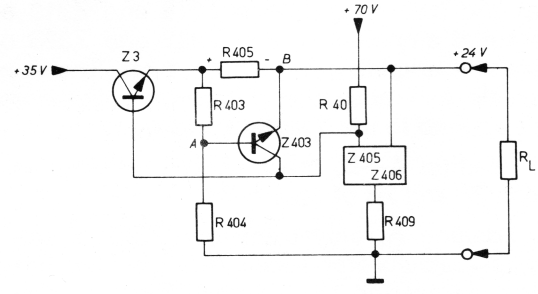

Fig. VIII-5 Simplified diagram of the ±24V overload protection circuit

voltage at point B remains practically constant. At a certain value of the load current, the voltage at point A will become so positive that transistor Z403 starts conducting. The base current of transistor Z402 is then reduced by Z403 and the load current is limited.

In the event of a full short-circuit, transistor Z403 saturates consuming a current which is nearly equal to the maximum current that can be supplied by the +70 V source. The base current to transistor Z3 is then nil and the transistor is blocked.

The described principle of stabilising and overload protection is the same for that part of the unit which supplies the —24 V voltage.

The reference voltage to which the output voltage is compared, is derived from the output voltage of the +24 V circuit.

K. +70 V AND +6.3 V STABILISING CIRCUITS (printed-wiring card 5)

The circuit diagram is shown in Fig. XVI-18.

The principle already described for the ±24 V stabilising unit also applies to the 6.3 V circuit. Therefore, only the main parts of the circuits are identified here.

Transistors Z512 and Z513 form the differential amplifier.

A reference voltage obtained from the +24 V supply is applied to the base of transistor Z513, via voltage divider R519-R520.

Overload protection is provided by transistor Z511 and resistor R514. The control voltage from the differential amplifier is applied to power transistor Z1, via transistor Z510.

The principle of the +70 V circuit operation is similar to that of the other stabilising circuits. As the transistor configurations are different, a short description is given in the following paragraph.

A rectified and smoothed voltage is applied to the output terminal of the unit, via transistor Z502. Part of the output voltage is applied via voltage divider R509-R510 to the base of transistor Z506, which shows a constant voltage of +24 V at its emitter.

The collector of transistor Z506 is connected to the base of transistor Z503, via resistor R508. Under normal conditions transistor Z505 is non-conductive. A variation of the output voltage gives rise to a control voltage at the collector of transistor Z506. From the base of transistor Z502, this control voltage counteracts the voltage variations.

Overload protection is accomplished by transistor Z505 and resistor R505.

L. HIGH VOLTAGE POWER SUPPLY (printed-circuit cards 7 and 8)

The circuit diagram is shown in Fig. XVI-21.

The high voltage for the cathode ray tube is generated by an LC generator consisting of transistors Z701-Z702, capacitor C702 and the primary of transformer T701.

The oscillator frequency is approximately 30 kHz. The voltage on point 12 of winding S8 of the secondary of transformer T701 is fed via a voltage-tripler unit to the post-acceleration anode. In the voltage tripler, the voltage is increased to approximately 7.5 kV.

From winding S7-S8 point 11, the —2150 V cathode voltage for the c.r.t. is obtained, via the rectifying and smoothing circuit.

Part of this voltage is diverted to the focussing grid g3, via resistor R816 and potentiometer RV5 FOCUS.

Winding S1 supplies a stabilised voltage which is used to heat the filament of the c.r.t.

A floating voltage is available across winding S6. After having been rectified and smoothed it is applied to grid g1 of the c.r.t. This voltage is pre-adjustetd by means of potentiometetr RV803 INTENSITY LIMIT.

The cathode-to-grid voltage (and consequently the intensity of the c.r.t. trace) is controlled by means of potentiometer RV4 INTENSITY.

The voltage variation caused by this potentiometer is amplified by transistor Z802 and fed to capacitor C803. The voltage is in parallel with winding S6 of transformer T701 and is applied to grid g1 of the c.r.t. in this way.

The cathode-to-grid voltage is limited to approximately 150 V by neon tubes LA801 and LA802.

Diode Z801 protects transistor Z802 when the grid voltage is short-circuited to earth.

The blanking pulses are applied to grid g1 via diode Z803, amplifier transistor Z802 and capacitor C803.

A voltage obtained from winding S5 is full-wave rectified and smoothed. This +190 V voltage is then applied to three voltage dividers. The voltage is applied to grids g2 and g4 of the c.r.t. via pre-set potentiometer RV801 ASTIGMATISM.

A voltage is fed to grid g5 via voltage divider R802-R803, and potentiometer RV802 GEOMETRY, and supplies an adjustable voltage to grid g6.

The +190 V voltage is also applied to printed-circuit card 9 and to the avalanche transistor on printed-circuit card 13.

M. LOW VOLTAGE RECTIFIER (printed-circuit card 6)

The circuit diagram is shown in Fig. XVI-23.

This unit supplies voltages required for the stabilising units on printed-circuit cards 4 and 5.

Winding S9 of transformer T1 supplies the voltage for pilot lamp LA1 and for the graticule-illumination lamps LA2 and LA3. The illumination is continuously variable by means of potentiometer RV6 ILLUM.

IX. Gaining access to parts

A. REMOVING THE HOUSING

The upper and/or the lower part of the housing can be removed after turning the "quick fastener" screws (four screws for each part) counter-clockwise.

B. REMOVING THE KNOBS (Fig. IX-1)

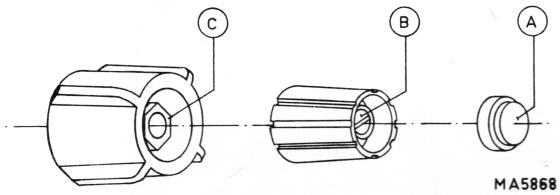

Fig. IX-1 Removing the knobs

Single knobs:
— Remove cap „A" with a pointed knife.
— Loosen screw „B".
— Remove the knob.

Double knobs:
— Remove cap „A" and screw „B".
— Remove the inner knob.
— Loosen nut „C".
— Remove the outer knob.

C. REMOVING THE CRT BEZEL

— Press the lower part of the bezel upwards and out.
— Remove the bezel.

D. REMOVING THE EHT PLUG

— Turn the plastic clamp in clockwise direction and remove it.
— Remove the EHT plug.

E. REMOVING THE CRT

— Remove the CRT bezel and the illumination device.
— Disconnect the EHT plug.
— Loosen screw A (Fig. IX-2).
— Loosen the two screws B and remove bracket C (Fig. IX-3).
— Remove the CRT socket.
— Pull out the tube.

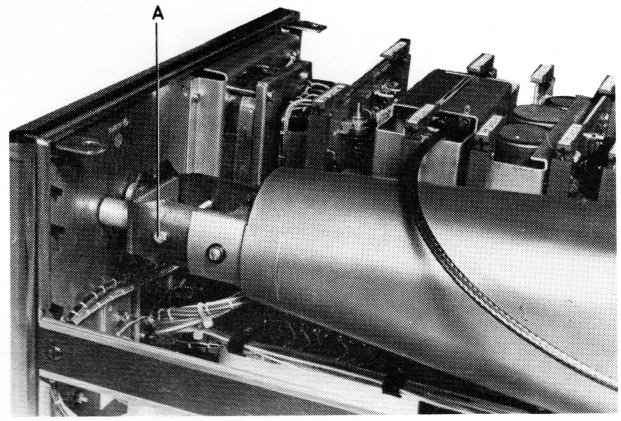

Fig. IX-2 Removing the c.r.t.

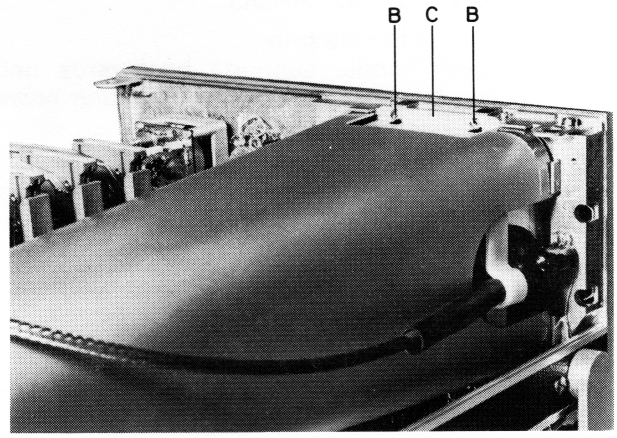

Fig. IX-3 Removing the c.r.t.

F. MOUNTING A NEW CRT

— Insert a new tube.
— Mount the illumination device, the contrast plate and the bezel.
— Adjust the axial position of the tube so that it is pressed to the contrast plate.
— Mount bracket C and tighten the both screws B (Fig. IX-3).
Note: Press bracket C downwards as much as possible.

— If necessary, adjust the vertical axis and the horizontal axis of the screen by means of screws D (Fig. IX-4) underneath the tube.
— Connect the EHT plug an the CRT socket.
— Tighten screw A (Fig. IX-2).

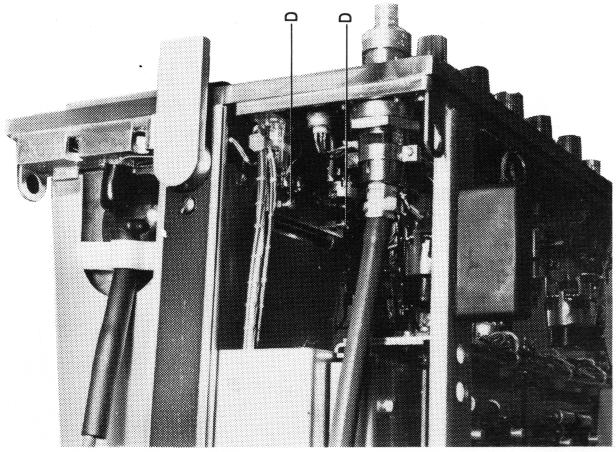

Fig. IX-4 Removing the c.r.t.

IMPORTANT: After replacing the CRT, electrical adjustments are necessary. See chapter XI, CHECKING AND ADJUSTING.

G. REMOVING THE HANDLE

— Remove the handle grip.
— Turn both handle supports backwards until they can be pulled out of the mounting holes.

H. REMOVING PRINTED-WIRING CARDS 1. . .5 AND 8

— Remove the housing (upper half)
— Pull up the printed-wiring cards according to Figures IX-5 and 6.

NOTE: Before pulling up card 1, the three coaxial cables should be detached.

J. REMOVING PRINTED-WIRING CARDS 6 AND 7

— Loosen the two „quick fastener" screws, which secure the printed-wiring card to the wiring board 9.
— Pull up the card according to Figures IX-5 and 6.

K. INSERTING PRINTED-WIRING CARDS 1. . .8

— Push down the circuit card perpendicularly according to Figures IX-7 and 8.
— Ensure that the circuit card is properly pushed down into the connector.
— Fasten printed-wiring cards 6 and 7 by turning the „quick fastener" screws.

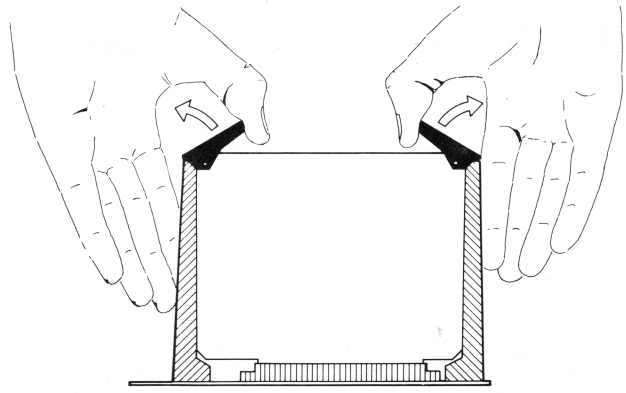

Fig. IX-5 Removing the printed-wiring cards

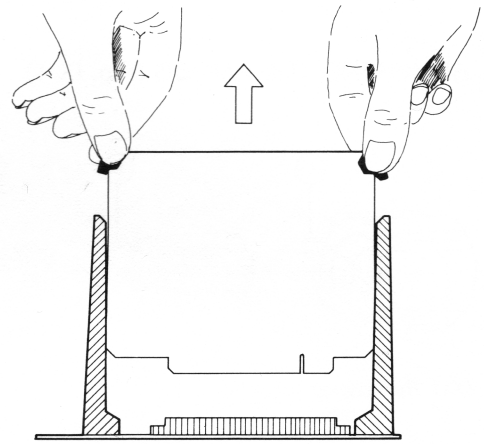

Fig. IX-6 Removing the printed-wiring cards

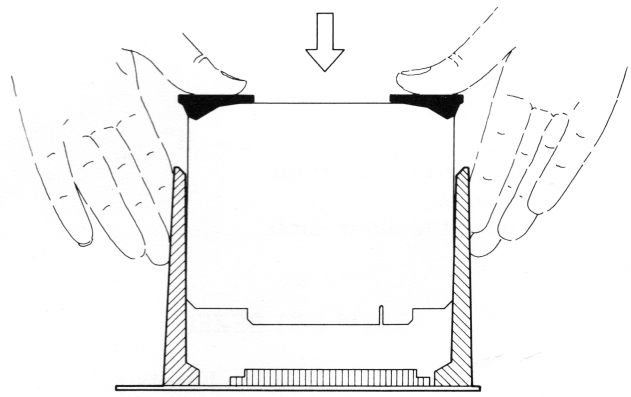

Fig. IX-7 Fitting printed-wiring cards

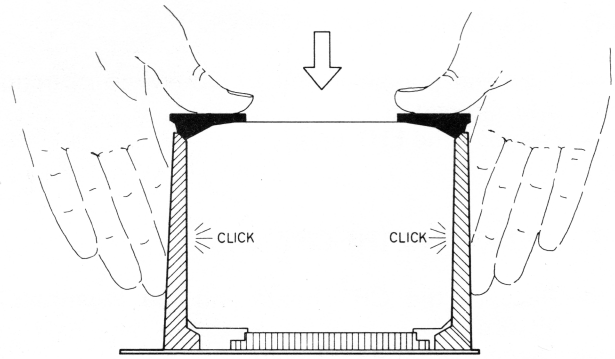

Fig. IX-8 Fitting printed-wiring cards

L. REMOVING PRINTED-WIRING CARDS 10

Note: These printed-wiring cards are indentical and interchangeable.

— Turn the instrument upside-down.
— Remove the housing.
— Remove the screening plate (located over the sampling heads).
— Remove the three screws A (see Fig. IX-9).
— Disconnect the printed-wiring card from the sampling head by lifting the card sligthly upwards.
— Pull the card out of the connector.

M. REMOVING PRINTED-WIRING CARD 13 (Fig. IX-9)

— Remove the screening plate.
— Remove the connection plugs from printed-wiring card 11 (sampling head).
— Remove the four screws B.
— Pull the card out of the connector.

N. REMOVING THE SAMPLING HEAD Figures IX-9 and 10)

IMPORTANT: The sampling heads are identical and in principal interchangeable. However, when interchanging the complete sampling heads, the sampling diodes have to be turned (see below under „Gaining access to the sampling diodes"). Card 11 can be interchanged without any additional measures.

— Remove the screening plate.
— Remove printed-wiring card 10 (see above).
— Disconnect the plug on printed-wiring card 13.
— Loosen the four screws B and remove printed-wiring card 13.
— Remove the two screws C and the screw D.
— Disconnect the delay line.

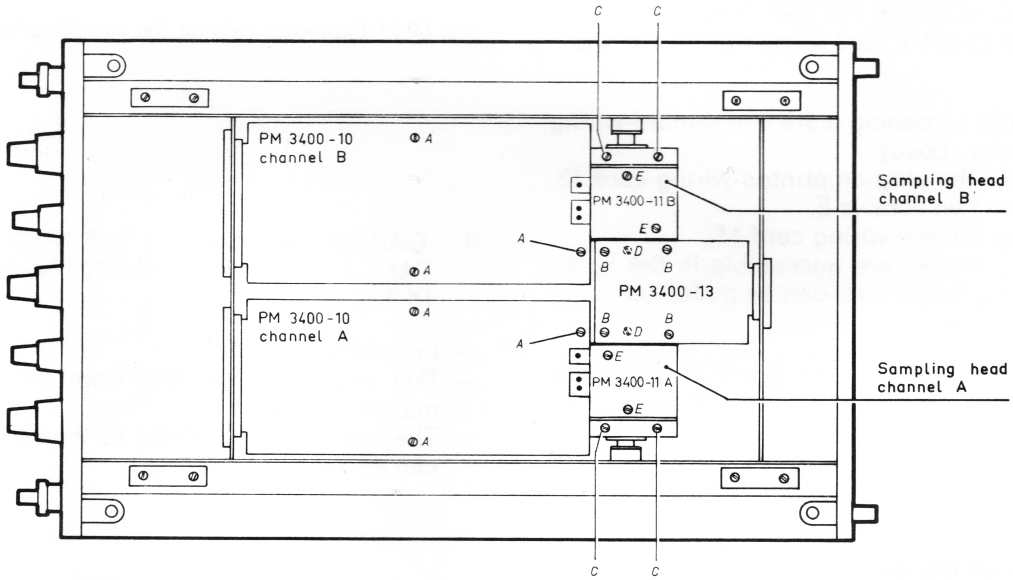

Fig. IX-9 Removing printed-wiring cards

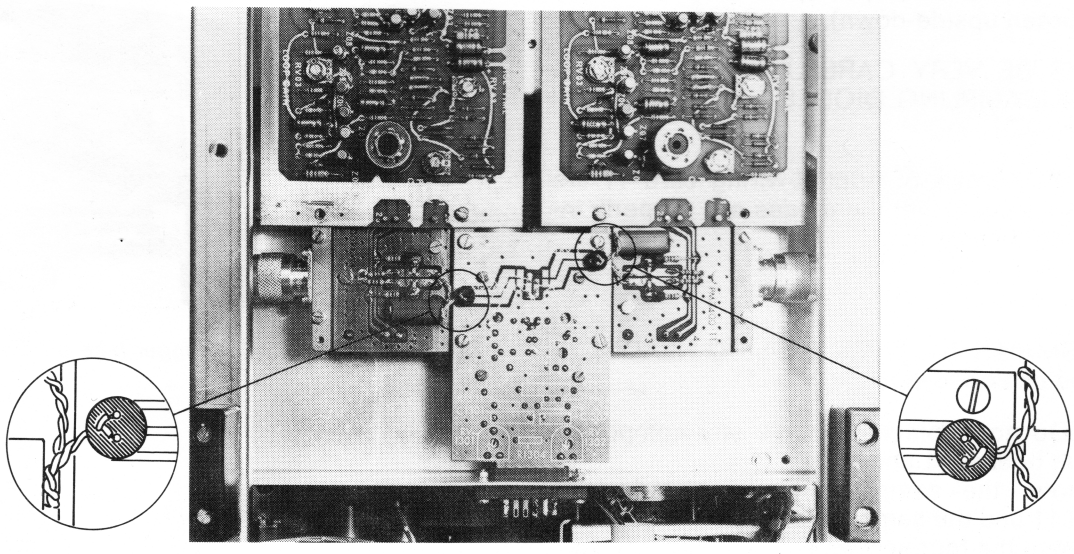

Fig. IX-10 Removing the sampling head

O. MOUNTING THE SAMPLING HEAD (Figures IX-9 and 10)

— Connect the delay line.
— Slightly tighten the two screws C.
— Insert printed-wiring cards 10 and 13 in their connectors.
— Adjust the position of the sampling head so that it fits to printed-wiring cards 10 and 13.
— Tighten screws C and screw A (near printed-wiring card 13).
— Remove card 13.
— Tighten screw D.
— Insert card 13 again and tighten the four screws B.
— Tighten both screws A on printed-wiring card 10.
— Connect the plugs on printed-wiring card 13 according to Fig. IX-10.
Note direction of plug.
— Refit the screening plate.

P. GAINING ACCESS TO THE SAMPLING DIODES Z1201-Z1202 (Figures IX-9, 10 and 11)

— Remove the screening plate and printed-wiring card 10 (see above).
— Disconnect the plug on printed-wiring card 13.
— Loosen the two screws E.
— Pull up the printed-wiring card 11.

The sampling diodes are accessible in the holes of the sampling head. They can be pulled up using a pair of tweezers.

IMPORTANT: When removing printed-wiring card 11, it may happen that one or both of the diodes are attached to the diode holders of the card. Carefully note the location of the anode and cathode of the diodes so that they are not fitted in the wrong direction.

The cathode of the diode is indicated by a blue spot. Check that the diode next to printed-wiring card 10 has the blue spot upwards (the oscilloscope turned upside-down).

ALWAYS BE VERY CAREFUL WHEN INSERTING THE SAMPLING DIODES INTO THE SAMPLING HEAD!

Before the screws of printed-wiring card 11 are tightened, ensure that the diodes are properly inserted into the holders.

Q. DISMANTLING THE SAMPLING HEAD (see exploded view Fig. IX-11)

NOTE: Do not replace or move any component on circuit boards 11 and/or 12.
— Remove the sampling head, printed-wiring card 11 and the sampling diodes.
— Remove the four screws F.
— The head can now be dismantled.

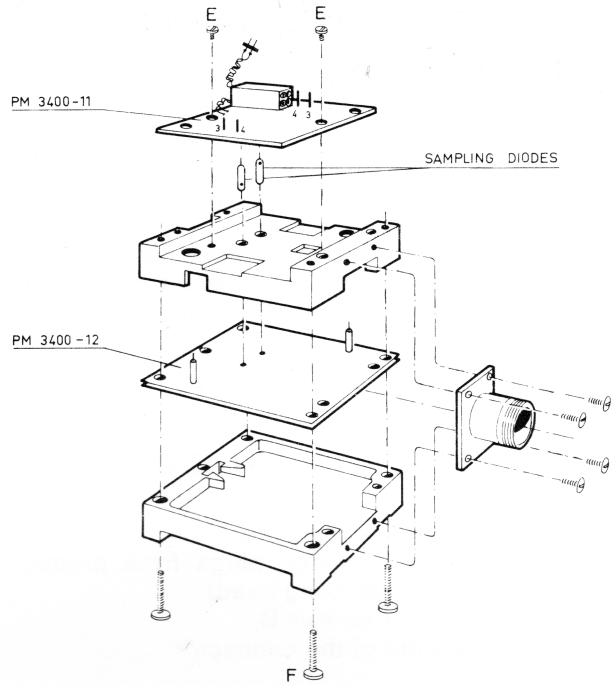

Fig. IX-11 Exploded view of the sampling head

R. GAINING ACCESS TO THE TRIGGER TAKE-OFF TRANSFORMER T3A-B (Fig. IX-12)

— Loosen screws A.
— Pull out the delay line from the input connector.
— The transformer is fitted to the delay line and can easily be unsoldered.

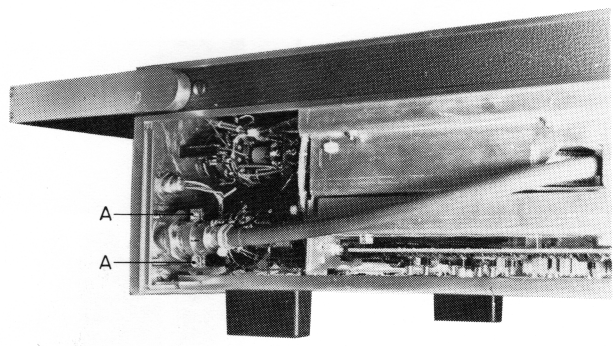

Fig. IX-12 Access to the trigger take-off transformer

X. Survey of equipment required for checking, adjusting and fault finding

Tektronix Pulse Generator Type 284
Philips Counter/Timer Type PM 6630
Philips Digital Multimeter Type PM 2421
Philips Pulse Generator Type PM 5770
Philips Oscilloscope Type PM 3200

ATTENUATORS
2 6 dB ± 1 %
1 10 dB ± 1 %
1 20 dB ± 1 %
1 100 x ± 1 %

COAXIAL CABLES, 50 Ω, WITH BNC CONNECTORS

Quant.	Length (mm)	Delay	Code number
2	200	1 ns	4822 320 10009
1	400	2 ns	4822 320 10011
2	600	3 ns	4822 320 10012
1	1960	10 ns	4822 320 10013

1 BNC T-piece junction

XI. PM 3400 checking and adjusting

GENERAL

In point 1 up to and including point 12, the procedure for checking and adjusting every printed-wiring card is stated. Furthermore, the checks and adjustments required after replacement of certain components are described.

When, for example, a printed-wiring card has been repaired or replaced, it should be checked and adjusted according to this description. However we then assume that the remaining parts of the instrument work properly.

Point 13 describes how to check the pulse response of the oscilloscope.

In point 14, finally, a general check of the instrument is stated.

The location of the adjusting elements can be found on the unit lay-outs in section XVI.

1. PM 3400-1, TRIGG./TIME BASE

1.1. Equipment required

— Pulse generator, Tektronix Type 284
— Digital Voltmeter, Philips Type PM 2421
— Counter/Timer, Philips Type PM 6630
— Attenuator, 10 dB
— Coaxial Cables, 50 Ω

1.2. Preliminary settings of the PM 3400 controls

RV1, RV2	SENSITIVITY	Fully clockwise
S1	TRIGG.	EXT.
S2	TIME SCALE MAGN.	1, CAL
S3	TIME/cm	10 ns
S5	Hor. mode	NORMAL
RV9	SAMPLES/cm	2 o'clock
S7A	mV/cm	5 mV, CAL
RV11A	POSITION	12 o'clock
S8	Vert. mode	A
S9	NORMAL/ SMOOTHED	NORMAL

1.3. Adjusting

1.3.1. Connect P1, TRIGG.IN to P5A,Ya using a 50Ω coaxial cable.

1.3.2. Adjusting RV102, TRIGG. T.D. BIAS

— Adjust RV102 in order to obtain a minimum distance between the negative-going peaks of the displayed "kick-back" pulses.

1.3.3. Adjusting RV101, SYNC. BAL.T.D. BIAS

— Set potentiometers RV1 & RV2, SENSITIVITY to the 12 o'clock position.
— Adjust RV101 to the position at which a trace just begins to appear on the CRT screen.

NOTE: If a trace does not appear (or alternatively if a trace is always visible, irrespective of the RV101 setting) then reset RV102, MEMORY T.D. BIAS as described in the following para. 1.3.4. Repeat the operation described in para. 1.3.3. above.

1.3.4. Adjusting RV103, MEMORY T.D. BIAS

— Disconnect P1, TRIGG. IN, and P5A, Y_A.
— Turn the SENSITIVITY potentiometer fully counter-clockwise to the TRIGG. range. Note that the trace disappears.
— Advance RV103 until the sweep begins, then return RV 103 to the point at which the sweep vanishes.
— Note the position of the RV103 cursor.
— Turn the SENSITIVITY potentiometer fully clockwise to the SYNC range and then adjust RV103 to the point at which the sweep just vanishes.
— Note the new position of the RV103 cursor.
— Set RV103 so that its cursor is at the mid-point of the two positions noted above.

1.3.5. Adjusting RV105, COMPARATOR T.D. BIAS

— Change previous setting of PM 3400 as follows:

S1	TRIGG.	A+
S3	TIME/cm	1 μs
RV7, RV8	TIME POSITION	fully clockwise
S7A	mV/cm	100 mV

— Set the Tektronix pulse generator type 284 as follows:

MODE	Square wave
AMPLITUDE	100 mV
PERIOD	1 μs

— Connect the square wave output of the pulse generator to PM 3400 input P5A, Y_A using a 50 Ω coaxial cable.
— Trigger with the SENSITIVITY potentiometer until a stable presentation is obtained.
— Turn RV201, DELAY ZERO (on circuit board 2) so that the first pulse of the displayed pulse train is positioned about 10 mm from the left-hand side of the screen.
— Trigger with the SENSITIVITY potentiometer until the majority of the positive-going edge of the first pulse is visible.
— Turn RV105 clockwise until the displayed pulses disappear.
— Turn RV105 counter-clockwise until the pulses re-appear, and keep turning until the pulses are 5 mm to the left of the point of re-appearance.

— Turn RV201, DELAY ZERO, until the positive-going edge of the first pulse coincides with the first vertical line of the CRT graticule.
— Set switch S3, TIME/cm, to 10 μs.
— Set the PERIOD switch of the pulse generator type 284 to 10 μs.
— Trigger with the SENSITIVITY potentiometer and check that the positive-going edge of the first pulse is situated as is shown in Fig. XI-1.
— If the required condition has not been obtained then re-adjust RV20, DELAY ZERO.
— The triggering point should be visible at all settings of switch TIME/cm.
— Disconnect the pulse generator from the oscilloscope.

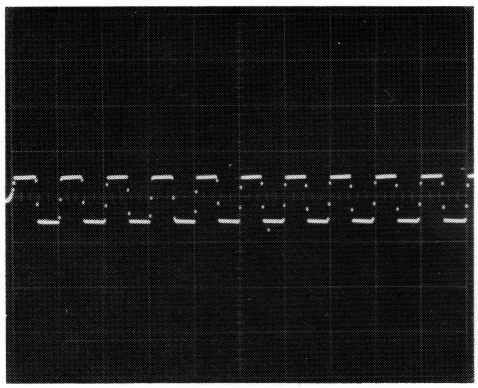

Fig. XI-1 Adjusting RV105, COMP. T.D. BIAS

1.3.6. Adjusting RV104, PULSE WIDTH

— Change the previous settings of PM 3400 as follows:

RV1	SENSITIVITY	SYNC. range
S3	TIME/cm	0.1 μs

— Connect the Philips counter/timer type PM 6630 to output P2, CAL./TRIGG.OUT using a 50 Ω coaxial cable.
— Set the controls of the counter/timer PM 6630 as follows:

FUNCTION	WIDTH
TIME BASE	10 ns
SLOPE	+
SENSITIVITY	50 mV
IMPEDANCE	50 Ω
LEVEL	Adjust until triggering occurs

— Change RV104, PULSE WIDTH, to 1.00 μs ± 1 %.

1.3.7. Checking the amplitude of the CAL./TRIGG. pulse

— Disconnect the counter/timer type PM 6630 from P2, CAL./TRIGG.OUT.
— Connect P2, CAL./TRIGG.OUT, to input P5A, Y_A, and to the digital multimeter type PM 2421 by means of the BNC T-piece junction and a 50 Ω coaxial cable.
— Check that the amplitude of the CAL./TRIGG. signal is 1200 mV ± 2 % when the housing of transistor Z116 is short-circuited to earth.
— Remove the connections between P2, CAL./TRIGG. OUT, the input P5A, Y_A, and the digital multimeter type PM 2421.

1.3.8. Checking the triggering stability

— Connect the sine wave output of the Tektronix pulse generator type 284 to P5A, Y_A, using a 50 Ω coaxial cable and a 10 dB attenuator.
— Set the PERIOD switch of the pulse generator to 1 ns.
— Change the previous setting of PM 3400 as follows:
S3 TIME/cm 1 ns
— Check that the CRT presentation is stable when S1, TRIGG., is switched between + and —.

1.3.9. Checking the tunnel diodes on circuit board PM 3400-1

The tunnel diodes may be checked using a suitable curve tracer. The check does not entail disconnecting the diodes, provided that the circuit board has been withdrawn from its oscilloscope.

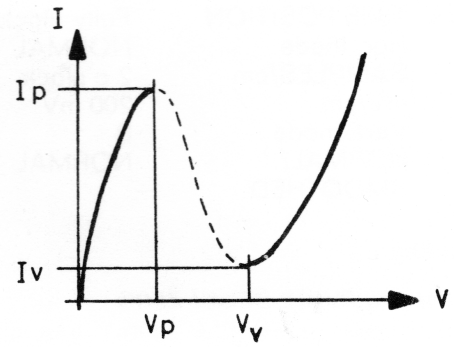

Fig. XI-2 Characteristic t.d. curve (static)

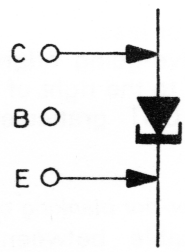

Fig. XI-3 Connection of curve tracer to tunnel diode

A choice of suitable instrument settings together with acceptable limits are stated in the following table:

Settings of curve tracer controls	Z104 (TD253B) Z105 (TD253A) Z131 (1N3718)
Vertical collector mA/div	2
Horizontal collector V/div	0.1

Dissipation limiter resistor		1 kΩ
Peak Volts approx.		12
Acceptable limits (see Fig. XI-2)		
I_p	mA	8.5—11.5
I_v	mA	2,2
V_p	mV	130
Vf_p	mV	425, 650

CAUTION: The maximum peak current is 12 mA.

2. PM 3400-2, STAIRCASE GENERATOR

2.1. Equipment required

— Pulse Generator Tektronix Type 284

2.2. Preliminary settings of the PM 3400 controls

RV1	SENSITIVITY	SYNC range
S3	TIME/cm	1 μs
S2	TIME SCALE MAGN.	1, CAL
RV7, RV8	TIME POSITION	Fully clockwise
S5	Hor. mode	NORMAL
RV9	SAMPLES/cm	2 o'clock
S7B	mV/cm	200 mV
S8	Vert. mode	B
S9	NORMAL/ SMOOTHED	NORMAL

2.3 Adjusting

2.3.1. Adjusting RV201, DELAY ZERO

NOTE: If circuit board PM 3400-1 has already been adjusted in accordance with the foregoing procedure, then the potentiometer RV201 will be in correct adjustment. In this circumstance use the following instruction as a check procedure.

— Connect output P2, CAL./TRIGG. OUT, to P5B, Y_B, using a 50 Ω coaxial cable the length of which must be 1 m or less.
— Position the positive-going edge of the displayed pulse 1 mm to the right of the first vertical line of the CRT graticule by turning RV201.

2.3.2. Checking the inter-dot blanking circuits

— Disconnect the cable between P2, CAL./TRIGG. OUT and P5B, Y_B.
— Turn the SAMPLES/cm potentiometer fully counter-clockwise.
— Check that the displayed dots are circular in shape and that they do not have tail traces.

2.3.3. Checking the sampling density

— Set the TIME/cm switch to 0.1 μs.
— Turn the SAMPLES/cm potentiometer fully counter-clockwise.
— Check that the sampling density is between 4 and 5 samples per centimeter.
— Turn the SAMPLES/cm potentiometer fully clockwise.
— Check that the beam sweeps across the whole screen in 0.1-2 seconds (corresponding to a sampling density of more than 1000 samples per centimeter).

2.3.4. Checking the horizontal modes of switch S5

— Set switch S5 to MANUAL.
— Check that the beam can be moved across the whole screen using the SCAN potentiometer.
— Set switch S5 to SINGLE position.
— Turn the SCAN.SPEED potentiometer fully clockwise.
— Check that the beam scans the whole screen in 3 to 7 seconds.
— Turn the SCAN.SPEED potentiometer fully counter-clockwise.
— Check that the scanning time is between 50 and 100 seconds.

2.3.5. Checking the staircase synchronisation (LF SYNC.)

— Set switch S5 to the NORMAL position.
— Apply a positive DC voltage of 1 V to P3, X IN.
— The sweep should now disappear.

3. PM 3400-3, MIXER/DEFL. AMPL.

3.1. Equipment required

Digital Multimeter Philips Type PM 2421.

3.2. Preliminary settings of the PM 3400 controls

RV1	SENSITIVITY	SYNC. range
S2	TIME SCALE MAGN.	1, CAL
S3	TIME/cm	0.2 μs
RV7, RV8	TIME POSITION	Fully clockwise
S5	Hor. mode	NORMAL
RV9	SAMPLES/cm	2 o'clock
S7A	mV/cm	20
RV10A	mV/cm	CAL.
S8	Vert. mode	B
S9	NORMAL/ SMOOTHED	NORMAL
S7B	mV/cm	200
RV10B	mV/cm	CAL.

3.3. Checking and adjusting

3.3.1. Horizontal trace alignment

— Shift the trace to the middle of the screen using the POSITION potentiometer RV11B.
— Align the trace with the axis of the CRT graticule using potentiometer RV301, HOR. TRACE ALIGN.

3.3.2. Vertical trace alignment

— Connect the output signal from P15, X OUT (on the rear panel) to P5A, Y_A, using a 50 Ω coaxial cable.
— Set switch S8, Vert. mode, to position A VERT. B HOR.

— Shift the vertical trace to the middle of the screen using the POSITION potentiometers RV11A and RV11B.
— Align the trace with the Y axis of the CRT graticule using the VERT. TRACE ALIGN. potentiometer RV302.

3.3.3. Adjusting RV305, X GAIN, and RV310, X POSITION

— Set the PM 3400 controls as detailed in para. 3.2. with the exception of switch S3, TIME/cm, which must be set to position 0.1 μs.
— Connect the calibration signal from P2 CAL./TRIGG. OUT, to the input P5B, Y_B, using a 50 Ω coaxial cable.
— Adjust RV310, X POSITION and RV305, X GAIN, so that the sweep starts 1.5 mm to the left of the first vertical line of the CRT graticule.
NOTE: The adjustment must be made carefully since the present potentiometers are interdependent.
— Check that the displayed pulse covers 10 cm ± 1 mm of the graticule.

3.3.4. Adjusting RV307, B GAIN

— Set switch S3, TIME/cm, to 0.2 μs.
— Set switch S8, Vert. mode, to A VERT. B HOR.
— Connect output P15, X OUT, to input P5A, Y_A, using a 50 Ω coaxiable cable.
— Position the displayed pulse to the middle of the screen with the POSITION potentiometer RV11A and RV11B.
— Adjust RV307, B GAIN, so that the pulse amplitude is 6.0 cm ± 0.5 mm.

3.3.5. Adjusting RV303, Y GAIN

— Set switch S8, Vert. mode, to position B.
— Shift the displayed pulse to the middle of the screen using the POSITION potentiometer RV11B.
— Adjust RV303, Y GAIN, so that the pulse amplitude is 6.0 cm ± 0.5 mm.

3.3.6. Adjusting RV309, A GAIN

— Disconnect P15, X OUT, and P5A, Y_A.
— Set switch S7A, mV/cm, to 200, CAL.
— Set switch S8, Vert. mode, to position A.
— Connect P2, CAL/TRIGG. OUT to P5A, Y_A.
— Shift the displayed pulse to the middle of the screen using the POSITION potentiometer RV11A.
— Adjust RV309, A GAIN, so that the pulse amplitude is 6.0 cm ± 0.5 mm.

3.3.7. Adjusting RV308, A BALANCE

— Disconnect P2, CAL./TRIGG. OUT and P5A, Y_A.
— Connect the output P12A, A OUT (on rear panel), to the voltage input of Digital Multimeter Type PM 2421. (Range DC, mV) using a coaxial cable.
— Set switch S8, Vert. mode, to position A.
— Turn potentiometer POSITION RV11A, until the DMM reads 0 V ± 5 mV.
— Shift the trace to the middle of the screen by means of the A BAL potentiometer RV308.

3.3.8. Adjusting RV305, B BALANCE

— Connect output P12B, B OUT (on rear panel) to the voltage input of DMM PM 2421 (range DC, mV).
— Set switch S8, Vert. mode, to position B.
— Turn the POSITION potentiometer RV11B, until the DMM reads 0 V ± 5 mV.
— Shift the trace to the middle of the screen by means of the B. BAL potentiometer RV306.

3.3.9. Checking the A — B BALANCE

— Set switch S8, Vert. mode, to position „A and —B".
— Check that the B trace does not move more than 14 mm in a vertical direction.

3.3.10. Adjusting RV304, A + B BALANCE

— Set switch S8, Vert. mode, to position A.
— Interconnect the capsules of transistors Z313, and Z314.
— Connect the voltage input of the digital multimeter type PM 2421 to the interconnected capsules (i.e. the collectors) and the LO input to earth.
— Set the digital multimeter to the „V" range.
— Note the measured voltage.
— Set switch S8, Vert. mode, to position A + B.
— Note the measured voltage.
— Adjust RV304 (A + B BALANCE) so that the two measured voltages are equal (permitted tolerance ± 1 V).

3.3.11. Checking the Driver Time Delay circuit

— Connect output P2, CAL./TRIGG. OUT, to the input P5A, Y_A, using a 50 Ω coaxial cable.
— Set switch S3, TIME/cm, to 1 μs.
— Turn potentiometer RV9, SAMPLES/cm, fully counter-clockwise (less than 5 samples/cm).
— Set switch S8, Vert. mode, to position A.
— Check that switch S9, NORMAL/SMOOTHED is at NORMAL.
— Check that the loop gain is 0.9-1.0 (see section 7 PM 3400-10, point 7.4.3.).
— Repeat the procedure above for channel B.

4. PM 3400-4, ± 24 V STAB, AND PM 3400-5, + 70/6.3 V STAB.

4.1. Equipment required

— Digital Multimeter Philips Type PM 2421.

4.2. Adjustment

4.2.1. Adjusting RV401, +24 V

— Connect the Digital Multimeter Type PM 2421 (set to the d.c. range) using a screened cable as follows:
- Inner conductor (+) to tag 74 on circuit board 9.
- Screen (—) to tag 65 on circuit board 9.

— Adjust RV401 so that a reading of +24 V ±0.5 % is obtained on the digital multimeter.
— Check that the following voltages on circuit board 9 are as follows:
tag 57: —24 V ± 2 %
tag 39: 6.3 V ± 2 %
tag 73: 70 V ± 2 %

4.3. Measuring the ripple of the stabilised voltages

4.3.1. Ripple of the + 24 V stabilised voltage
— Connect the Digital Multimeter Type PM 2421 to tag 74 (+) and tag 65 (—) on circuit board 9.
— Set the digital multimeter to AC and to the mV range.
— The ripple should be less than 0.3 mV_{rms}.

4.3.2. Ripple of the -24 V stabilised voltage
— Connect the Digital Multimeter Type PM 2421 to tag 57 (+) and tag 76 (—) on circuit board 9.
— The ripple should be less than 0.5 mV_{rms}.

4.3.3. Ripple of the +70 V stabilised voltage
— Connect the Digital Multimeter Type PM 2421 to tag 73 (+) and tag 65 (—) on circuit board 9.
— Connect the cathode follower probes to outputs P4A and P4B, PROBE POWER. If the probes are not available, then connect a 2.2 kΩ ± 5 %, 5.5 W resistor across the digital multimeter.
— The ripple should be less than 1.5 mV_{rms}.

4.3.4. Ripple of the +6.3 V stabilised voltage
— Connect the Digital Multimeter Type PM 2421 to tag 39 (+) and tag 65 (—) on circuit board 9.
— Connect the cathode follower probes as detailed in para. 4.3.3. (or a 22 Ω ± 10 %, 5.5 W resistor) across the digital multimeter.
— The measured ripple should be less than 0.3 mV_{rms}.

4.4. Checking the overload protection circuits

4.4.1. +24 V
— Connect a 22 Ω, 16 W resistor, between tags 74 and 65 on circuit board 9.
— Connect the Digital Multimeter Type PM 2421 across the resistor.
— The measured voltage should be less than 20 V.

4.4.2. -24 V
— Connect a 33 Ω, 16 W resistor between tags 57 and 65 on circuit board 9.
— Connect the Digital Multimeter Type PM 2421 across the resistor.
— The measured voltage should be less than 20 V.

4.4.3. +70 V
— Connect a 1.5 Ω, 5.5 W resistor between tags 73 and 65 on circuit board 9.
— Connect the Digital Multimeter Type PM 2421 across the resistor.
— The measured voltage should be less than 60 V.

4.4.4. +6.3. V
— Connect a 3.3 Ω ± 15 %, 5.5 W resistor between tags 39 and 65 on circuit board 9.
— Connect the Digital Multimeter Type PM 2421 across the resistor.
— The measured voltage should be less than 5 V.

5. PM 3400-6, LOW VOLTAGE RECTIFIER

5.1. Required instrument

— Digital Multimeter Philips Type PM 2421.

5.2. Measuring the ripple of the supply voltages to PM 3400-4

— Connect the Digital Multimeter Type PM 2421 across capacitor C602.
— The measured ripple should be less than 1 V_{rms}.
— Connect the Digital Multimeter Type PM 2421 across capacitor C604.
— The measured ripple should be less than 0.5 V_{rms}.

5.3. Measuring the ripple of the supply voltages to PM 3400-5

— Connect the Digital Multimeter Type PM 2421 across capacitor C603.
— Connect a 22 Ω ± 15 %, 16 W load resistor across the terminals of the digital multimeter.
— The ripple measured should be less than 0.5 V_{rms}.
— Remove the 22 Ω load resistor.
— Connect the Digital Multimeter Type PM 2421 across capacitor C601.
— Connect a 2.2 kΩ ± 15 %, 5.5 W load resistor across the terminals of the digital multimeter.
— The ripple measured should be less than 1.5 V_{rms}.

6. PM 3400-8, BLANKING AMPL.

6.1. Preliminary settings of the PM 3400 controls

RV1	SENSITIVITY	SYNC range
S3	TIME/cm	0.1 μs
RV9	SAMPLES/cm	position 2 o'clock
S8	Vertical mode	A and B

6.2. Checking and adjusting

6.2.1. Adjusting RV803, INTENS. LIMIT

— Set RV802, GEOMETRY to middle position
— Set potentiometer RV4, INTENSITY (on front-panel) in the 12 o'clock position.
— Adjust RV803, INTENSITY LIMIT, so that brightness of trace is sufficient.
— Turn the INTENSITY potentiometer RV4, fully counter-clockwise.
— Check that the trace disappears.

6.2.2. Adjusting RV801, ASTIGMATISM

— Turn the SAMPLES/cm, potentiometer RV9 fully counter-clockwise.
— Adjust the ASTIGMATISM potentiometer RV801, so that the displayed dots are circular in shape.
— Check that no tails or flyback traces are visible on the screen.

7. PM 3400-10A & PM 3400-10B SAMPLING AMPLIFIERS

7.1. General

Circuit boards PM 3400-10A & PM 3400-10B are identical so that the following instructions detailed for PM 3400-10A must also be applied to PM3400-10B. Note that the present potentiometers referenced on each circuit board are abbreviated (for example, RV1004 is marked RV04 on its circuit board).

7.2. Equipment required

— Pulse Generator, Tektronix Type 284
— Pulse Generator, Philips Type PM 5770
— 2 Attenuators 6 dB
— 1 Attenuator 20 dB
— 1 Attenuator 100 x (± 1 %)
— Coaxial cables 50 Ω

7.3. Preliminary settings of the PM 3400 controls

RV1	SENSITIVITY	SYNC. range
S1	TRIGG.	A+
S2	TIME SCALE MAGN.	10, CAL.
S3	TIME/cm	1 ns
S5	Hor. mode	NORMAL
RV9	SAMPLES/cm	2 o'clock
S7A	mV/cm	50
S8	Vert. mode	A
S9	NORMAL/ SMOOTHED	NORMAL

7.4. Checking and adjusting

7.4.1. Adjusting RV1002, RISE TIME

— Connect the PULSE output of Tektronix Pulse Generator type 284 to the input P5A, Y_A, using a coaxial cable (RG58, length less than 30 cm).
— Set the MODE switch of the pulse generator to the PULSE OUTPUT position.
— Turn potentiometer RV1, SENSITIVITY to the TRIGG. range until a stable display is obtained.
— Measure the rise time of the displayed pulse as detailed in the Operating Manual, page 27.
— If necessary, adjust RV1002, RISE TIME, in order to obtain a displayed pulse rise time of 210 ps ± 10 ps.

7.4.2. Adjusting RV1005, MEMORY BALANCE

— Disconnect the Pulse Generator 284.
— Turn the SENSITIVITY potentiometer RV1, to the SYNC. range.
— Set switch S7A, mV/cm, to the 5 mV/cm, CAL position.
— Shift the trace to the middle of the screen with the POSITION potentiometer RV11A.
— Set switch S7A, mV/cm, to position 200 mV/cm, CAL.
— Position the trace to the middle of the screen with the MEMORY BALANCE potentiometer RV1005.

7.4.3. Adjusting RV1004, MEMORY GATE WIDTH AND RV1003, LOOP GAIN

— Connect output P2, CAL./TRIGG. OUT to P5A, Y_A, using a 50 Ω coaxial cable.
— Change the previous settings of the PM 3400 controls as follows:

S3	TIME/cm	1 μs
S2	TIME SCALE MAGN.	1, CAL.
RV7, RV8	TIME POSITION	fully clockwise
RV9	SAMPLES/cm	fully-counter clockwise

— Ensure that the NORMAL/SMOOTHED switch S9 is set to NORMAL.
— Adjust RV1004, MEMORY GATE WIDTH, to maximum loop gain. The loop gain can be read on the position of the first dot on the leading edge of the displayed pulse.
— Adjust RV1003, LOOP GAIN, so that the loop gain is 0.95 (see Fig. XI-4).

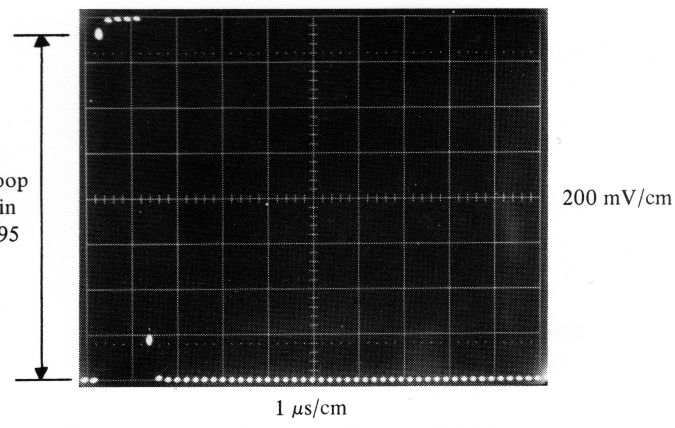

Fig. XI-4 Adjusting the loop gain to 0.95

7.4.4. Adjusting RV1001 LOW FREQUENCY COMPENSATION

— Change the settings of the PM 3400 controls as follows:

RV9	SAMPLES/cm	position 2 o'clock
S7A	mV/cm	10, CAL

— Position the zero level of the displayed calibration pulse to the middle of the screen by means of the POSITION potentiometer RV11A.
— Adjust the ringing which may occur immediately after the pulse, to minimum amplitude (peak-to peak value less than 10 mV) by means of RV1001 (LOW FREQ. COMP.)

7.4.5. Checking the loop gain at different positions of switch S7A, mV/cm

— Connect output P2, CAL./TRIGG. OUT, to input P5A, Y_A, using a 50 Ω coaxial cable and a 6 dB attenuator.
— Set switch S7A, to position 100 mV, CAL.
— Turn the SAMPLES/cm potentiometer RV9A, fully counter-clockwise.
— Check that the displayed pulse covers 6 cm ± 2 % of the screen and that the loop gain is still 0.95 ± 5 %.
— Connect a second 6 dB attenuator in series with the existing one.
— Set switch S7A, mV/cm, to position 50 mV, CAL.
— Check that the displayed pulse covers 6 cm ± 2 % of the screen, and that the loop gain remains 0.95 ± 5 %.
— Remove both 6 dB attenuators and insert one 20 dB attenuator instead.
— Set switch S7A, mV/cm, to position 20 mV, CAL.
— Check that the displayed pulse covers 6 cm ± 2 % of the screen and that the loop gain remains 0.95 ± 5 %.

7.4.6. Checking the displayed noise

— The displayed noise should not exceed 1.5 mV, tangentially measured in accordance with the instructions detailed in para. 9.

8. CHECKING AND ADJUSTING AFTER REPLACEMENT OF SAMPLING DIODES Z1201-Z1202 OR AVALANCHE TRANSISTOR Z1302.

8.1 General

Although the following instructions refer to channel A, they are equally applicable to channel B.

8.2. Equipment required

— Pulse Generator, Tektronix Type 284.
— Pulse Generator Philips Type PM 5770.
— Attenuator 100x accuracy ± 1 %.
— Coaxial cable 50 Ω.

8.3. Preliminary settings of the PM 3400 controls

RV1	SENSITIVITY	SYNC range
S2	TIME SCALE MAGN.	1, CAL
S3	TIME/cm	1 μs
S5	Hor. mode	NORMAL
S7A	mV/cm	200
S8	Vertical mode	A and B
S9	NORMAL/ SMOOTHED	NORMAL

8.4. Checking and adjusting

8.4.1. Adjusting RV1301, AVALANCHE VOLTS

— Connect output P2, CAL./TRIGG. OUT, to input P5A, Y_A, using a 50 Ω coaxial cable.
— Adjust RV1301, AVALANCHE VOLTS, so that the loop gain is 0.95 (see Fig. XI-4).
— Disconnect output P2, CAL./TRIGG OUT, and input P5A, Y_A.
— Check that the noise is less than 1.5 mV, tangentially measured as detailed in point 9.
— Set the mV/cm switch S7A to 5 mV, CAL.
— Set switch TIME/cm S3, step by step from 0.1 μs to 20 μs.
Simultaneously, check that the trace does not move more than 3 mm in a vertical direction.
— If the trace moves more than 3 mm, try another position of the AVALANCHE VOLTS potentiometer RV1301.
NOTE: The loop gain is then changed, so that a readjustment of the loop gain is required. See para. 7.4.3. It is extremely important that both channels are adjusted.
— If, however, trace noise and movement conditions are unsatisfactory, the faulty pair of sampling diodes should be changed.
— In exceptional cases, the matched pair of sampling diodes can be separated and combined with those of a new pair.
— If necessary replace the avalanche transistor Z1302.
— When trace noise and movement are within the acceptable limits, adjust RV1001, LOW FREQ. COMP., as detailed in para. 7.4.4. Note that both channels must be adjusted.
— Check the rise time and the loop gain according to para 7.4.1. and 7.4.5.

9. TANGENTIAL MEASUREMENT OF NOISE

9.1. General

The following instructions which apply to channel A must also be used to measure noise in channel B.

9.2. Equipment required

— Pulse Generator Philips Type PM 5770.
— Attenuator 100x.
— Coaxial cable 50 Ω.

9.3. Measurement procedure

— Connect pulse generator type PM 5770 to the oscilloscope input using a 50 Ω coaxial cable.
— Set the pulse generator controls so that the period time of the displayed square wave is about 2 μs and the duty cycle is about 50 %. Rise time and fall time should be set to minimum.
— Connect an 100x attenuator between the pulse generator and the oscilloscope.
— Set switch S1 TRIGG., to EXT. and the SENSITIVITY potentiometer RV1, to the SYNC. range.
— Set switch S7A, mV/cm, to 5 mV, CAL.
— Set potentiometer RV9, SAMPLES/cm, to the 3 o'clock position.
— Reduce the amplitude of the square wave until the dark band between the two noise bands just disappears (see Fig. XI-5 and 6). Note that this adjustment should be carried out slowly, because it is difficult to see wether the dark band has just vanished or not.
— Disconnect the 100x attenuator.
— Set switch S7A, mV/cm, to a value at which the pulse amplitude easily can be read. Dividing this amplitude by 100 will give the value of the displayed noise.
— Repeat the above measured procedure for channel B.

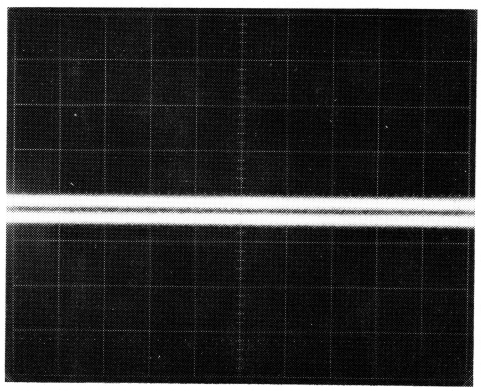

Fig. XI-5 Noise measurement: dark band still visible

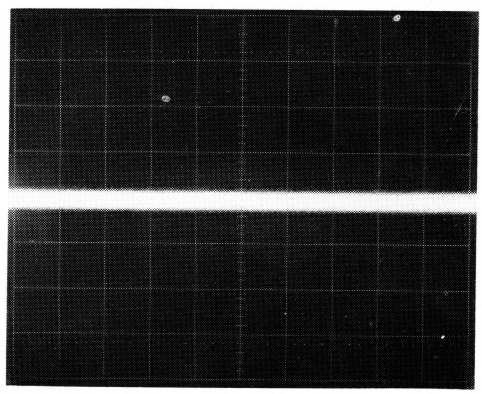

Fig. XI-6 Noise measurement: dark band just vanished

10. CHECKING AND ADJUSTING AFTER REPLACEMENT OF CIRCUIT BOARD PM 3400-1

10.1. Equipment required

— Pulse Generator, Tektronix Type 284.
— 2 Coaxial cables of equal length and each with a propagation rate of less than 2 ns.
— Coaxial cable 50 Ω.
— 1 BNC T-piece junction.

10.2 Preliminary settings of the PM 3400 controls

RV1	SENSITIVITY	TRIGG. range
S1	TRIGG.	A+
S2	TIME SCALE MAGN.	20
S3	TIME/cm	1ns
S7A	mV/cm	20 mV CAL.
S7B	mV/cm	20 mV CAL.
S5	Hor. mode	NORMAL
RV9	SAMPLES/cm	position 2 o'clock
S8	Vert. mode	A and B
S9	NORMAL/ SMOOTHED	SMOOTHED

10.3. Checking and adjusting

Pulse Generator Type 284 to inputs P5A, Y_A, and P5B as shown in Fig. XI-7. Ensure that the two cables between the T-piece and the oscilloscope inputs are of equal length.
— Shift the traces to the middle of the screen.
— Measure the time interval between the positive-going edges of the displayed pulse on the 50 % level of amplitude.
— Check that the propagation delay of the connection cables is equal by interchanging them. Take a further measurement.
— The time interval should be less than 30 ps.
— If not, proceed as follows:
  Determine the channel (A or B) which is producing the **first** pulse on the screen.
  Shorten the twisted wire on circuit board PM 3400-11 of this channel, see Fig. IX-10 (unsolder the connection on circuit board 11).
  Shorten the wire sufficiently enough to reduce the displayed time interval to less than 30 ps (propagation delay of twisted wire is approximately 5 ps/mm).

IMPORTANT NOTE:

Ensure that the GR and BNC connectors are plugged into the inputs of the oscilloscope correctly, otherwise the displayed time interval between the channels will be affected.

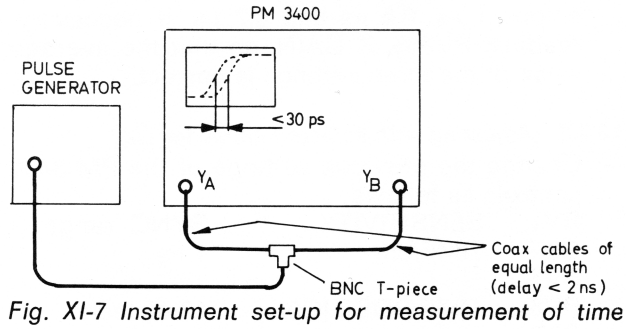

Fig. XI-7 Instrument set-up for measurement of time interval between channels

11. CHECKING AND ADJUSTING AFTER REPLACEMENT OF THE CRT

— Adjust circuit board PM 3400-8, BLANKING AMPL. as detailed in para. 6.
— Adjust circuit board PM 3400-3, MIXER/DEFL. AMPL., according to para. 3 with the exception of para. 3.3.11.

12. CHECKING AND ADJUSTING AFTER REPLACEMENT OF SWITCH S3, TIME/cm

12.1. Equipment required

— Pulse Generator Tektronix Type 284.

12.2. Preliminary settings of the PM 3400 controls

RV1	SENSITIVITY	TRIGG. range
S1	TRIGG.	B—
S2	TIME SCALE MAGN.	1, CAL.
S3	TIME/cm	1 μs
RV7, RV8	TIME POSITION	12 o'clock position
S5	Hor. mode	NORMAL
RV9	SAMPLES/cm	2 o'clock
S7B	mV/cm	100
S8	Vert. mode	B
S9	NORMAL/ SMOOTHED	NORMAL

12.3. Checking and adjusting

12.3.1. General check of the sweep

— Set the PERIOD switch of the pulse generator to 1 μs.
— Connect the SQUARE WAVE output of the pulse generator to input P5B, Y_B, using a 50 Ω coaxial cable.
— Check that the sweep starts at a point 1.5 mm to the left of first vertical line on the CRT graticule and that 10 pulses appear within the CRT graticule.
— Connect the PULSE OUTPUT of the Tektronix
— If the display does not meet the requirement stated above then adjust RV310, X POSITION and RV305, X GAIN on circuit board PM3400-3, MIXER/DEFL. AMPL. See para. 3.3.3.
— Set switch S3, TIME/cm, step by step to positions 1 μs, 0.5 μs and 0.2 μs. If necessary, readjust RV305, X GAIN, so that the average value of the three settings is correct.

12.3.2. Adjusting with selected capacitor C22

— Change the previous settings of the PM 3400 controls as follows:

RV1	SENSITIVITY	SYNC. range
S3	TIME/cm	1 ns
RV7, RV8	TIME POSITION	12 o'clock
S7B	mV/cm	50 mV

— Set the PERIOD switch of the pulse generator to 1 ns.
— Adjust the sweep to 1 ns/cm by soldering a suitable value for capacitor C22. The range of values is as follows:
0.47 pF
0.68 pF
1 pF (target value)
1.5 pF
2.2 pF
Code numbers and tolerances for C22 are quoted in the list of parts, chapter XIV-G.
– Check that the adjustment is correct when potentiometer RV7, TIME POSITION is in both the fully clockwise and fully counter-clockwise positions.

12.3.3. Adjusting capacitor CV1

— Set switch S3, TIME/cm, to 2 ns.
— Adjust capacitor CV1 so that 2 ns/cm is obtained on the screen.
— Check that the adjustment is correct when the TIME POSITION potentiometer RV7 is turned both fully clockwise and fully counter-clockwise.

12.3.4. Adjusting capacitor CV2

— Set switch S3, TIME/cm, to 5 ns.
— Set PERIOD switch of the pulse generator to 10 ns.
— Adjust capacitor CV2 so that a scale of 5 ns/cm is obtained on the screen.
— Check that the adjustment is correct when potentiometer TIME POSITION RV7, is turned fully clockwise and fully counter-clockwise.

13. CHECKING THE PULSE RESPONSE OF THE OSCILLOSCOPE

13.1. Equipment required

— Pulse Generator Tektronix Type 284
— Air line connecting generator to oscilloscope or, if not available, coaxial cable length 20 cm, with BNC connectors.

13.2. Preliminary settings of the PM 3400 controls

S1	TRIGG.	B+
S2	TIME SCALE MAGN.	5, CAL.
S3	TIME/cm	1 ns
S5	Hor. mode	NORMAL
RV9	SAMPLES/cm	2 o'clock
S7B	mV/cm	50 mV
S8	Vert. mode	B
S9	NORMAL/ SMOOTHED	NORMAL

13.3. Checking

— Connect the PULSE OUTPUT of the pulse generator to oscilloscope input Y_B via an air line, length about 10 cm.
— Trigger with control SENSITIVITY until a stable picture is obtained.

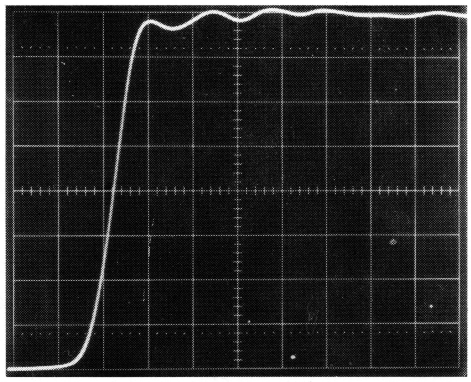

Fig. XI-8. Pulse response on input pulse with rise time 70 ps. Air line connection between pulse generator and oscilloscope.

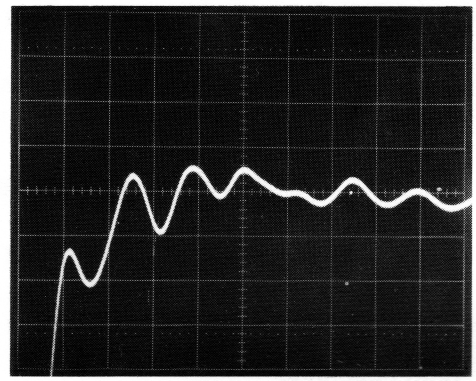

Fig. XI-9. Detail magnification of pulse top. Air line connection between pulse generator and oscilloscope.

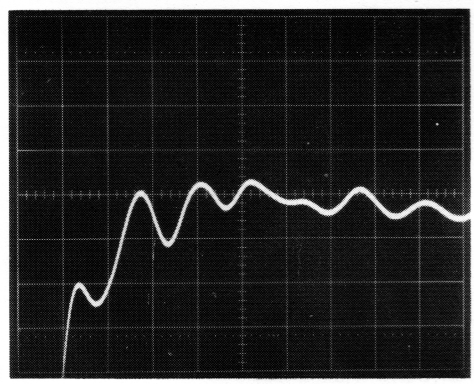

Fig. XI-10. Detail magnification of pulse top. Coaxial cable (length 20 cm) connection between pulse generator and oscilloscope.

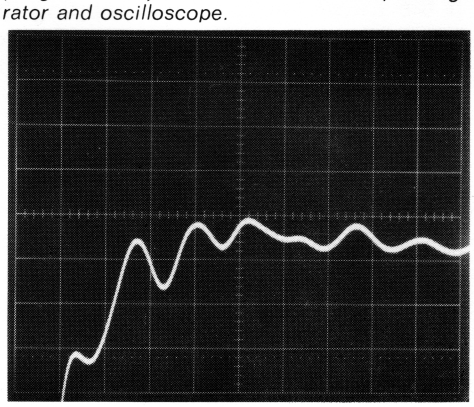

Fig. XI-11. Detail magnification of pulse top. Coaxial cable (length 60 cm) connection between pulse generator and oscilloscope.

— Fig. XI-8 shows the pulse response. The extremely short rise time of the input pulse (70 ps) causes ringings, which can be studied in the detail magnification of the pulse top shown in Fig. XI-9. Figures XI-10 and 11 show how the pulse response will virtually deteriorate if a coaxial cable is used for connecting the pulse generator to the oscilloscope.
Before judging the pulse response of the oscilloscope, the following external factors influencing the result must be taken into account.
— Rise time of the output pulse of the pulse generator.
— Pulse flatness deviation of the pulse generator (for Tektronix 284: ± 3 % during the 2 first nanoseconds after that the pulse has reached the 100 % level).
— Type and length of connection between pulse generator and oscilloscope.
— Good or bad contact between the connectors of the connection cable and instruments.

NOTE: If the pulse response seems to be bad, compare with the response of channel A. If the result still is the same, it is very likely that it depends on the external factors mentioned above. A better pulse response of channel A than of channel B indicates that the error is to be found in the oscilloscope (delay line, sampling amplifier etc.).

14. GENERAL CHECK

14.1. Equipment required

— Pulse Generator Tektronix Type 284
— Digital Multimeter Philips Type PM 2421
— Counter/Timer Philips Type PM 6630
— Pulse Generator Philips Type PM 5770
— BNC cables, attenuators, T-pieces etc.

14.2. Preliminary settings of controls

RV1	SENSITIVITY	SYNC. range
S2	TIME SCALE MAGN.	1, CAL
S5	Hor. mode	NORMAL
RV9	SAMPLES/cm	2 o'clock
S8	Vert. mode	A and B
RV12A, B	POSITION	12 o'clock
S7A, B	mV/cm	200, CAL.
S9	NORMAL/ SMOOTHED	NORMAL
RV4	INTENSITY	2 o'clock
RV5	FOCUS	12 o'clock

14.3. Checking

— Check that two traces are displayed on the CRT screen.
— Check the following voltages on circuit board 9A;

Measuring point	Voltage	Adjust, if necessary
pin 74	+24 V ±1 %	RV401
pin 57	—24 V ±2 %	
pin 39	+6.3 V ±2 %	
pin 73	+70 V ±2 %	

— Set switch TIME/cm to 0.1 μs.

— Check the width of the calibration pulse according to point 1.3.6.

— Check the amplitude of the calibration pulse according to point 1.3.7.

— Set the controls as follows:

RV9	SAMPLES/cm	fully counter-clockwise
S8	Vert. mode	A

— Check that the displayed dots are circular in shape. If necessary, adjust RV801 ASTIGMATISM. Simultaneously, readjust control FOCUS.

— Check cushion distortion. If necessary, adjust RV802, GEOMETRY.

— Turn control INTENSITY to position 12 o'clock. Check that the intensity is sufficient (the instrument should be warmed up for at least 15 min.). If necessary, adjust RV803, INTENSITY LIMIT.

— Connect output X OUT to input Y_A.

— Change the settings of controls:

S8	Vert. mode	A VERT. B HOR.
S7A	mV/cm	20, CAL
RV9	SAMPLES/cm	2 o'clock

— Check that the trace is parallel to the vertical lines of the internal graticule. If not, align with RV302, VERT. TRACE ALIGNMENT.

— Set switch S8, Vert. mode, to B.

— Check that the trace is parallel to the horizontal lines of the internal graticule. If not, align with RV 301, HOR. TRACE ALIGNMENT.

— Check and, if necessary, adjust circuit board 1 according to point 1.

— Apply the calibration signal from output CAL/TRIGG. OUT to input Y_B.

— Set the controls as follows:

RV1	SENSITIVITY	SYNC.
S2	TIME SCALE MAGN.	1, CAL
S3	TIME/cm	0.1 μs
S5	Hor. mode	NORMAL
RV9	SAMPLES/cm	2 o'clock
S8	Vert. mode	B
S7B	mV/cm	200, CAL.

— Turn control TIME POSITION until the whole pulse is visible.

— Check that the sweep starts 1.5 mm to the left of the first vertical line of the internal graticule and that the pulse covers 10 cm ±2 % of the display.

— If necessary, adjust RV310, X POSITION, and RV305, X GAIN (See point 3.3.3.).

— Check B GAIN, Y GAIN, A GAIN, A BAL., B BAL. and A+B BAL. according to points 3.3.4. . .3.3.10.

— Check the rise time of each channel according to point 7.4.1.

— Check the Memory Gate Width and the loop gain according to point 7.4.3.

— Check that the noise is less than 1.5 mV, tangentially measured (See point 9). Measure both channels!

— If the noise is higher than 1.5 mV in spite of correct rise time and loop gain, adjust Avalanche Volts according to point 8.4.1.

— Check Low Frequency Compensation according to point 7.4.4.

— Check Memory Balance according to point 7.4.2. Repeat the check with the lower skin plate fitted.

— Display the calibration pulse.

— Check by switching S9, NORMAL/SMOOTHED, that smoothing occurs for both channels.

— Set switches S7A and S7B, mV/cm, to position 5 mV/cm, CAL.

— Lift the instrument at the front about 5 cm and drop it on the table. The traces should not move from their original positions.

— If the traces move when dropping the instrument, check that all screws on boards 10, 13 and the sampling head are properly tightened. Also ensure that the plate over the sampling heads is properly fastened.

XII. Fault tracing analyses

Diagram Fig. XII-10 will facilitate fault tracing **when neither sweep nor spot is visible on the CRT.**

Using this diagram, the faulty circuitry or component can be traced to, for example, a certain circuit board.

To make the diagram comprehensible and as less complicated as possible, no detailed hints for repair are stated.

Start the fault tracing from the left. If it is obvious that only one channel is faulty, start where this is indicated.

The oscillograms are measured with a PHILIPS Oscilloscope Type PM 3250 provided with a passive probe 1 : 10. The voltages are measured with a PHILIPS Digital Multimeter Type PM2421.

Set the PM 3400 controls as follows:

RV1	SENSITIVITY	SYNC. range
S2	TIME SCALE MAGN.	1, CAL
S5	Hor. mode	MANUAL
RV9	SCAN.	12 o'clock
S8	Vert. mode	A and B
RV12A, B	POSITION	12 o'clock
S7A, B	mV/cm	200, CAL
S9	NORMAL/ SMOOTHED	NORMAL
RV4	INTENSITY	2 o'clock
RV5	FOCUS	12 o'clock

NOTE: Some test points on the printed-wiring cards are better accessible if an extension board is used. (Item 66 in Chapter XIII. MECHANICAL PARTS LIST, Fig XII-9).

VOLTAGES

No	Measuring point	Settings of controls		Voltage to be measured
1	P12, A OUT (B OUT)	POSITION	fully CCW	≈—2.8 V
			12 o'clock	0V ±1 V
			fully CW	≈+2.8 V
2	c.b. 2, pin 5	SCAN.	fully CCW	≈+4 V
			fully CW	≈+9 V

NOTE: TIME SCALE MAGN. should occupy position 1, Cal.

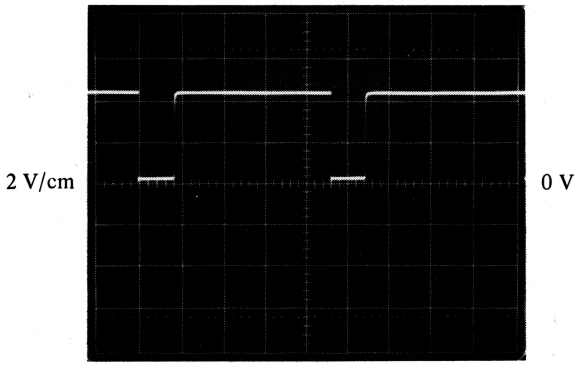

Fig. XII-1

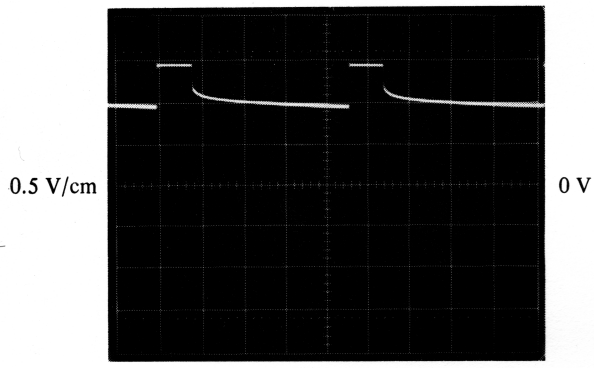

Fig. XII-2

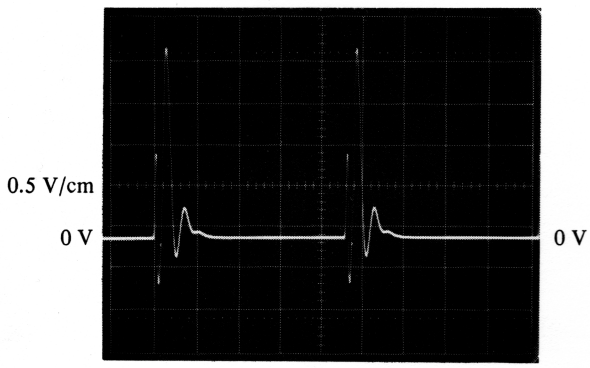

Fig. XII-3a

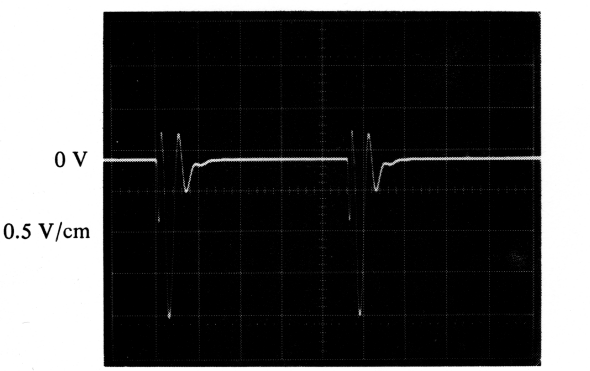

Fig. XII-3b

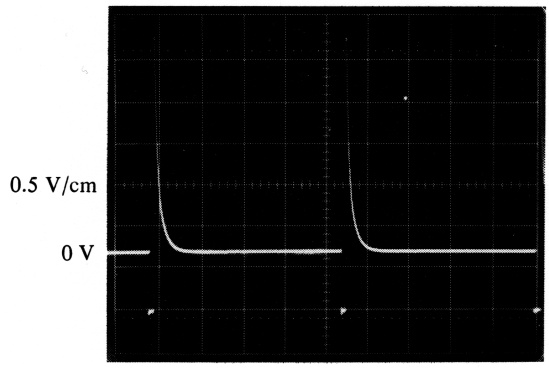

Fig. XII-4

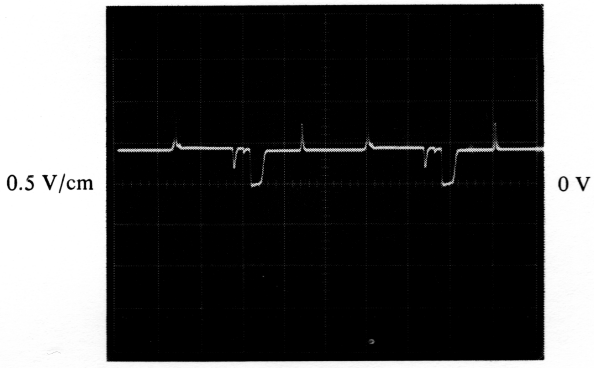

Fig. XII-5a

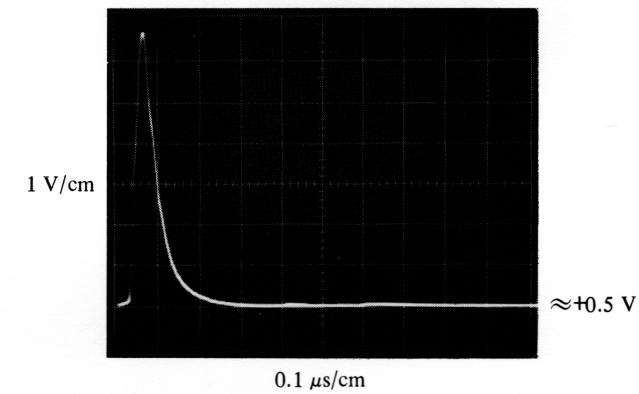

Fig. XII-5b

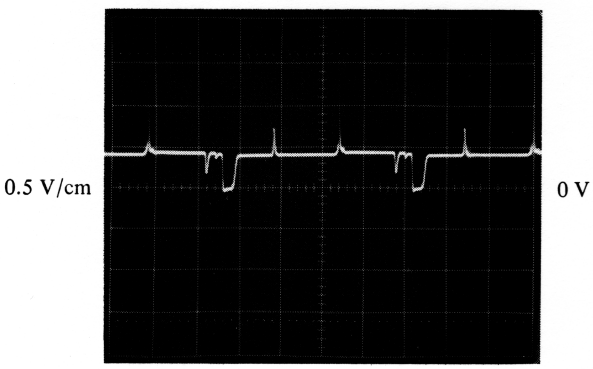

Fig. XII-5c

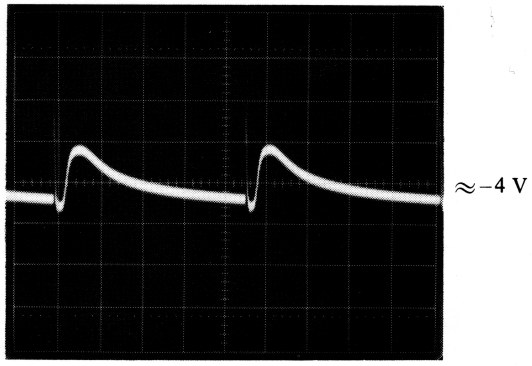

Fig. XII-6a

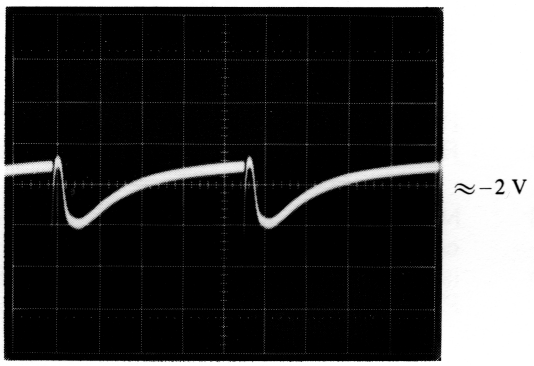

Fig. XII-6b

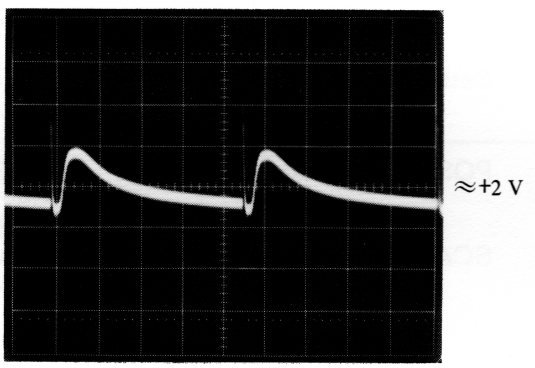

Fig. XII-6c

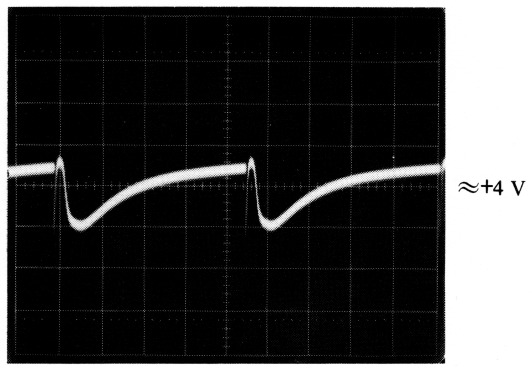

Fig. XII-6d

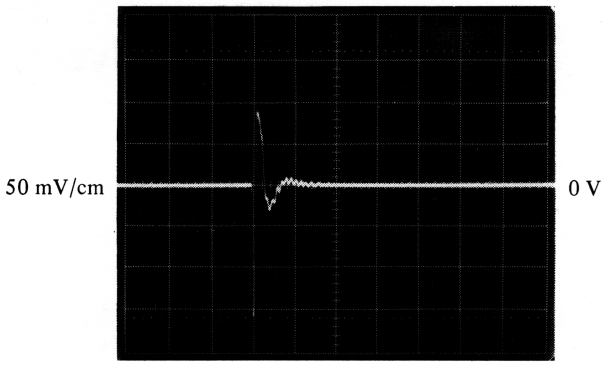

Fig. XII-7a

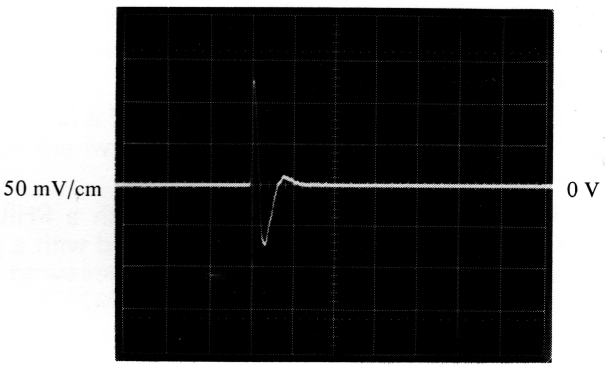

Fig. XII-7b

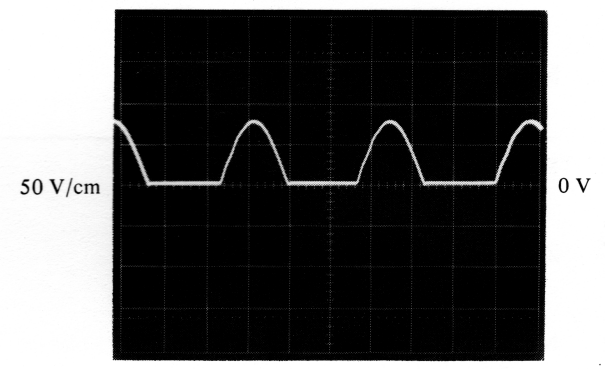

Fig. XII-8

Fig. XII-1-8 Oscillograms

WAVEFORMS

Fig.	Measuring point	Remarks
XII-1	Collector Z802	
XII-2	c.b. 8, pin 6	
XII-3a	c.b. 10, source Z1030	POSITION control fully CW *)
XII-3b	c.b. 10, source Z1030	POSITION control fully CCW **)
XII-4	c.b. 10, pin 10	
XII-5a	c.b. 2, pin 21	
XII-5b	c.b. 13, pin 2	Detail magnification of 5a and 5 c INT. TRIGG.
XII-5c	c.b. 13, pin 2	
XII-6a	c.b. 10, pin 25	POSITION control fully CW
XII-6b	c.b. 10, pin 25	POSITION control fully CCW
XII-6c	c.b. 10, pin 24	POSITION control fully CW
XII-6d	c.b. 10, pin 24	POSITION control fully CCW
XII-7a	c.b. 13, pins 7 and 10 (positive going) pins 8 and 9 (neg. going)	TIME POSITION control fully CW SCAN control fully CCW TIME/cm 0.2 μs/cm See also waveform 7b
XII-7b	c.b. 13, pins 7 and 10 (positive going) pins 8 and 9 (neg. going)	The whole pulse is not visible due to bandwidth limit of the test oscilloscope. The pulse shape can vary depending on the test equipment.
XII-8	c.b. 7, pin 5 (collector Z702)	INT. TRIGG.

*) CW = clockwise
**) CCW = counter-clockwise

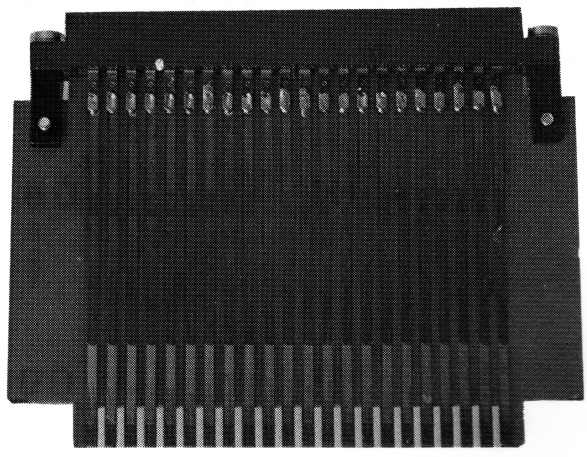

Fig. XII-9 Extension board

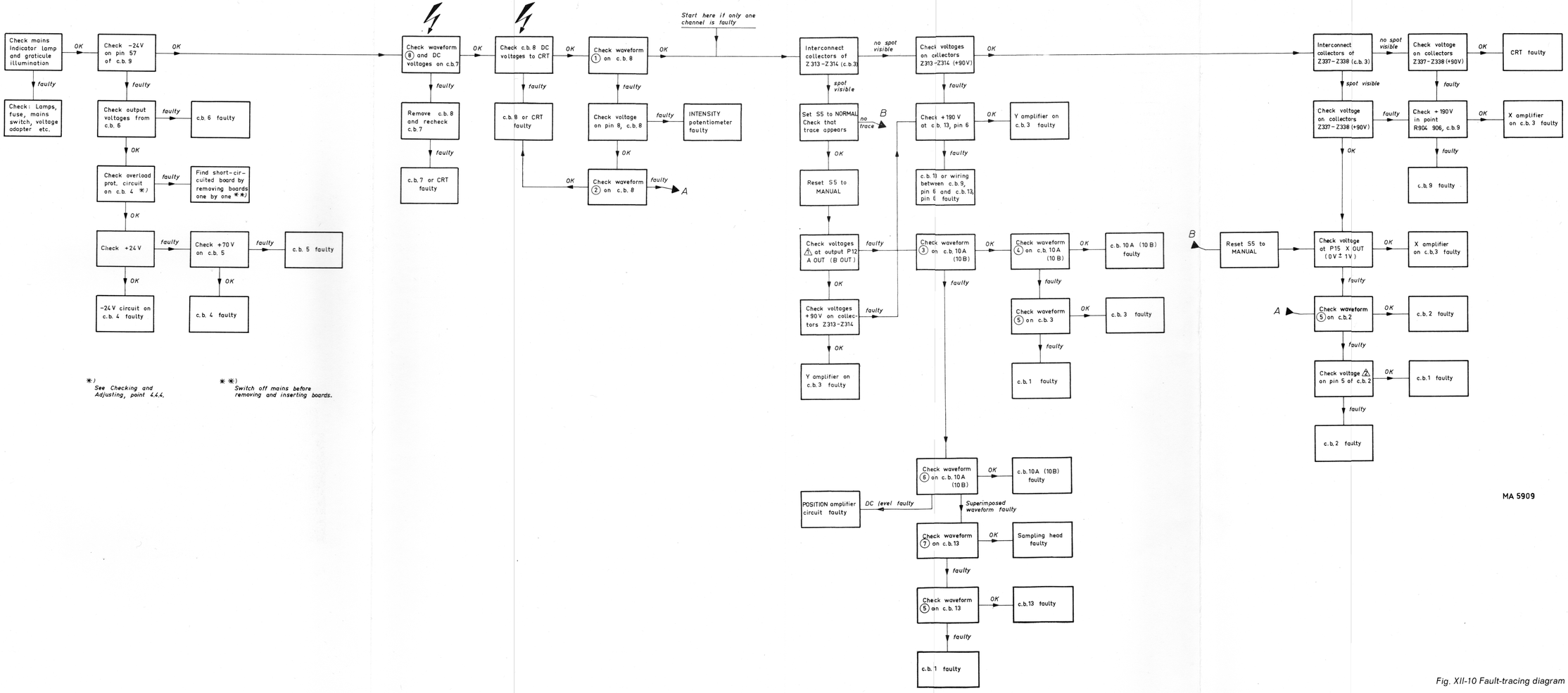

Fig. XII-10 Fault-tracing diagram

XIII. List of mechanical parts

Item	Fig.	Qty	Code number	Description
1	XIII-1	1	4822 459 40233	Bezel
2	—	1	4822 492 61665	Leaf spring assembly securing bezel
3	XIII-1	1	4822 480 30078	Contrast plate
4	—	2	4822 466 70226	Plastic segment for graticule illumination lamp
5	—	2	4822 492 40427	Leaf spring for item 4
6	XIII-1-2	7	4822 267 10004	BNC socket P1, P2, P3, P12A, P12B, P14, P15
7	XIII-1	2	4822 267 10044	Input socket P5A, P5B
8	—	2	4822 532 20538	Bush, large, for P5A and P5B
9	—	2	4822 532 20539	Bush, small, for P5A and P5B
10	XIII-1	2	4822 267 40165	Output socket P4A, P4B

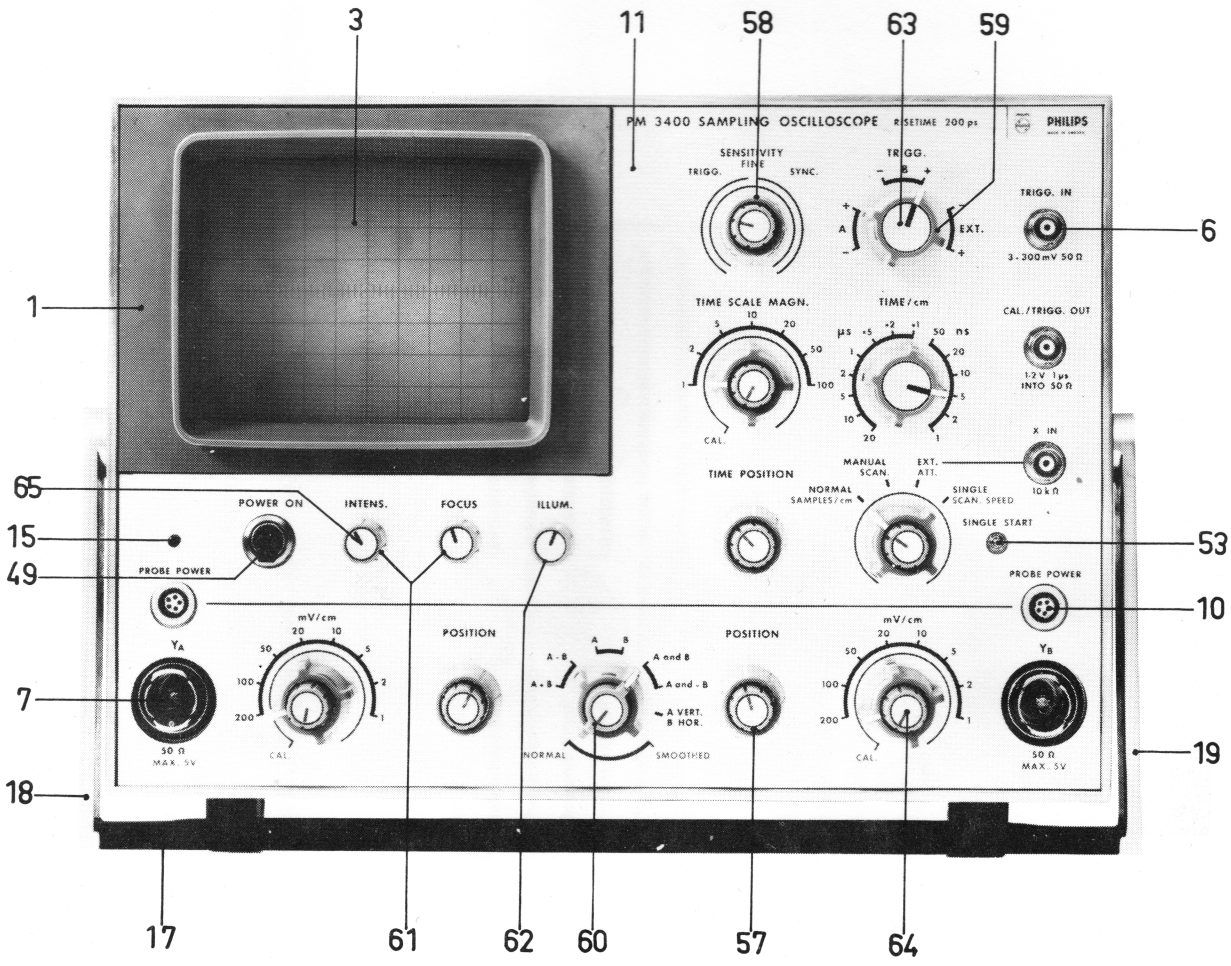

Fig. XIII-1 Front view showing item numbers

Item	Fig.	Qty	Code number	Description
11	XIII-1	1	4822 455 80056	Text plate
13	—	3	4822 255 20022	Lamp holder
15	XIII-1	1	4822 381 10152	Lens for pilot lamp LA1
16	XIII-3	4	4822 462 40252	Rubber foot
17	XIII-1	1	4822 498 20061	Grip
18	XIII-1-3	1	4822 498 70039	Handle support left
19	XIII-1-2	1	4822 498 70041	Handle support right
20	—	1	4822 462 10103	Tilting bracket
21	XIII-2	1	4822 265 30066	Mains socket P11
23	XIII-2	1	4822 272 10003	Mains-voltage adapter
24	XIII-2	1	4822 462 70737	Plastic cover for item 23
25	XIII-2	1	4822 256 40026	Fuse holder
26	XIII-2	1	4822 455 80057	Rear text plate
27	XIII-2	2	4822 462 40253	Rubber support
28	—	3	4822 255 40072	Mounting set for power transistors

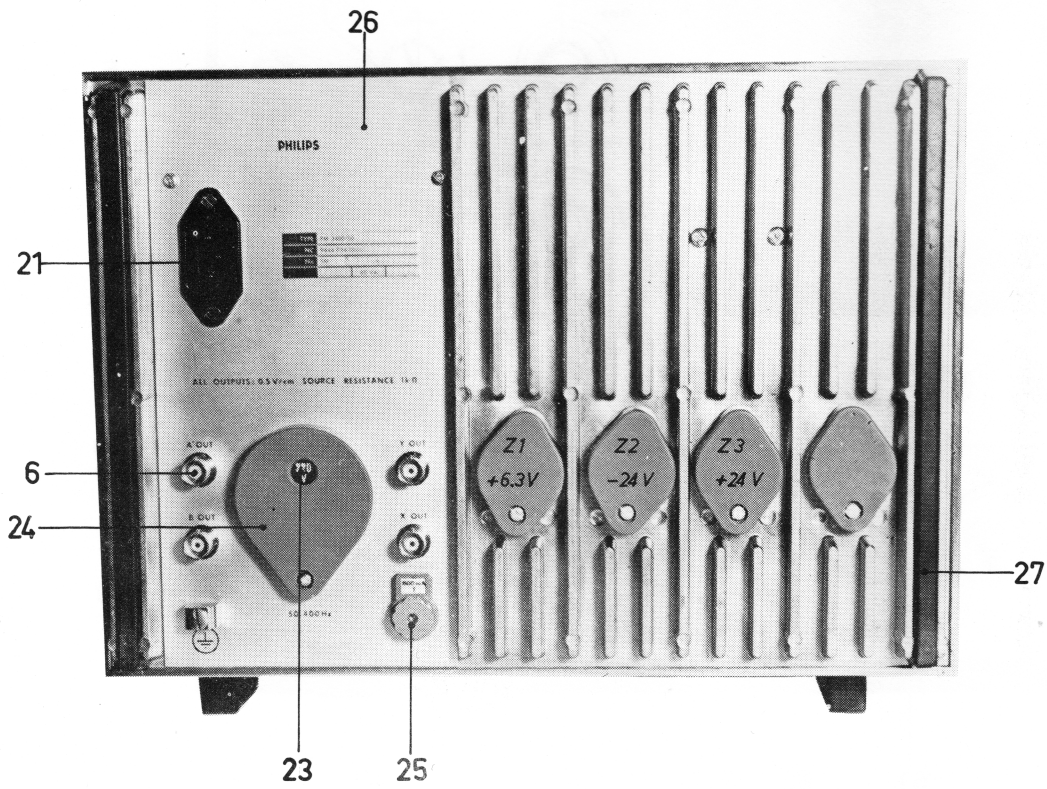

Fig. XIII-2 Rear view showing item numbers

Item	Fig.	Qty	Code number	Description
29	—	3	4822 255 40085	Power-transistor holder
31	XIII-4	16	4822 462 30149	Guide strip for printed-wiring board
32	—	8	4822 417 20027	Quick fastener
33	—	4	4822 417 20013	Quick fastener
34	—	3	4822 255 40044	Cooling fin
35	—	18	4822 255 40012	Transistor socket, T018, 4-pin
36	—	90	4822 255 40057	Transistor socket, T018, 3-pin
37	—	6	4822 255 40038	Transistor socket, T05, 3-pin
38	—	8	4822 268 20058	Lead spring socket
39	—	6	4822 268 20061	Connector female on printed-wiring board 10
40	—	4	4822 268 20059	Connector female on printed-wiring board 13
41	—	3	4822 268 20057	Spring socket on printed-wiring board 13
42	—	6	4822 255 40006	Spacer T05
43	—	25	4822 255 40058	Spacer T018
44	—	8	4822 268 10092	Connector, male, on printed-wiring board 11

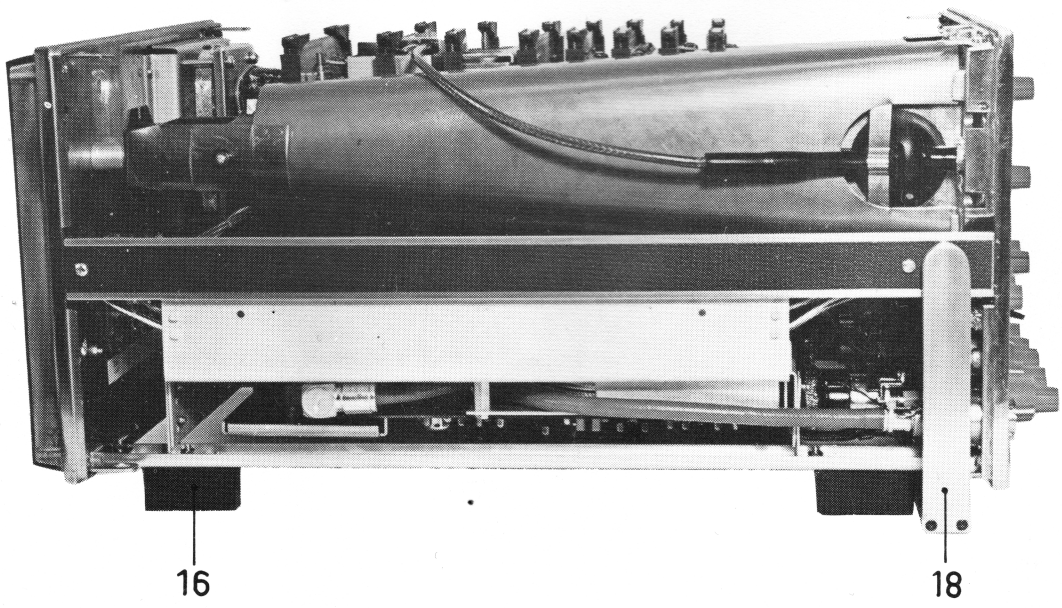

Fig. XIII-3 Left-hand side view showing item numbers

Item	Fig.	Qty	Code number	Description
45	—	4	4822 268 10093	Connector, male, on printed-wiring board 12
46	XIII-4	1	4822 273 10068	Switch S1 with components
47	—	1	4822 273 40261	Switch S2 with components
48	XIII-4	1	4822 273 50114	Switch S3 with components
49	XIII-1	1	4822 277 10166	Switch S4
50	—	1	4822 273 60094	Switch S5 with components
51	XIII-5	2	4822 273 60095	Switches S7A and S7B with components
52	XIII-5	1	4822 273 60096	Switches S8 and S9 with components
53	XIII-1	1	4822 276 10433	Switch S6
54	—	1	4822 277 20111	Switch S201
55	XIII-5	2	4822 267 60023	Connector for printed-wiring board
56	XIII-5	1	4822 267 40134	Connector for printed-wiring board
57	XIII-1	8	4822 413 30085	Knob for RV 2, 3, 8, 9, 10, 12
58	XIII-1	4	4822 413 40211	Knob for RV1, 7, 11A, 11B
59	XIII-1	7	4822 413 40112	Knob for S1, 2, 3, 5, 7A, 7B, 8
60	XIII-1	1	4822 413 30084	Knob for S9
61	XIII-1	2	4822 413 30346	Knob RV4, 5
62	XIII-1	1	4822 413 30082	Knob for RV6
63	XIII-1	2	4822 413 70037	Cap for knobs S1, 3
64	XIII-1	9	4822 413 70039	Cap for knobs RV2, 3, 8, 9, 10A, 10B, 12A, 12B, S9
65	XIII-1	3	4822 413 70038	Cap for knobs RV4, 5, 6
66	—		4822 263 70035	Extension board for printed-wiring cards

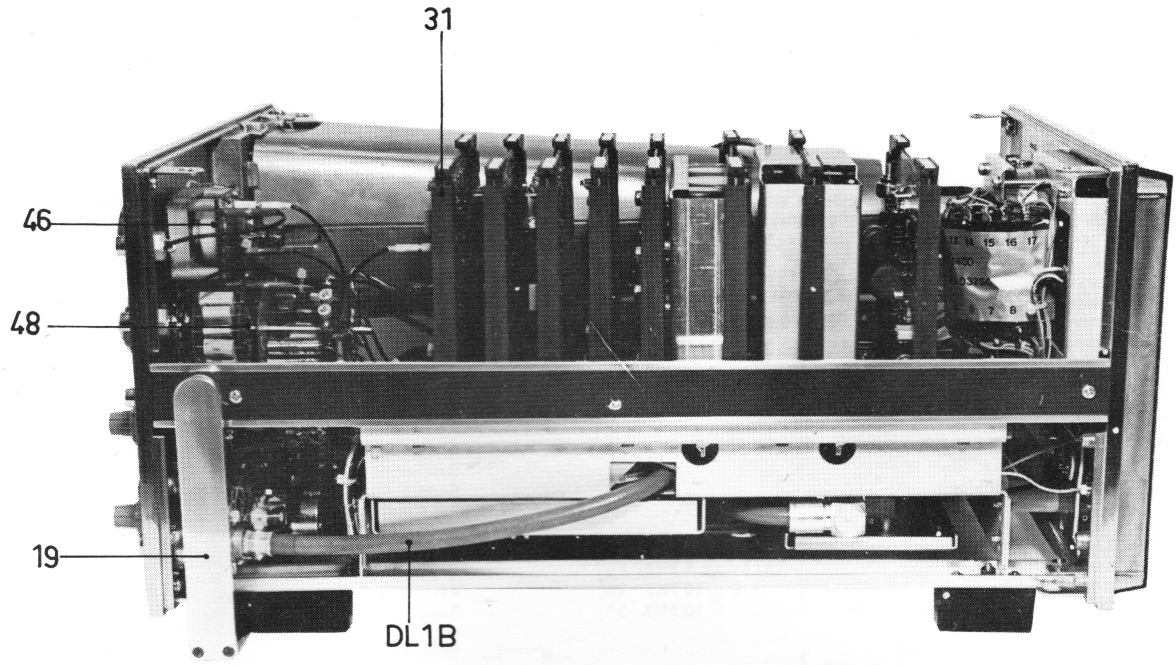

Fig. XIII-4 Right-hand side view showing item numbers

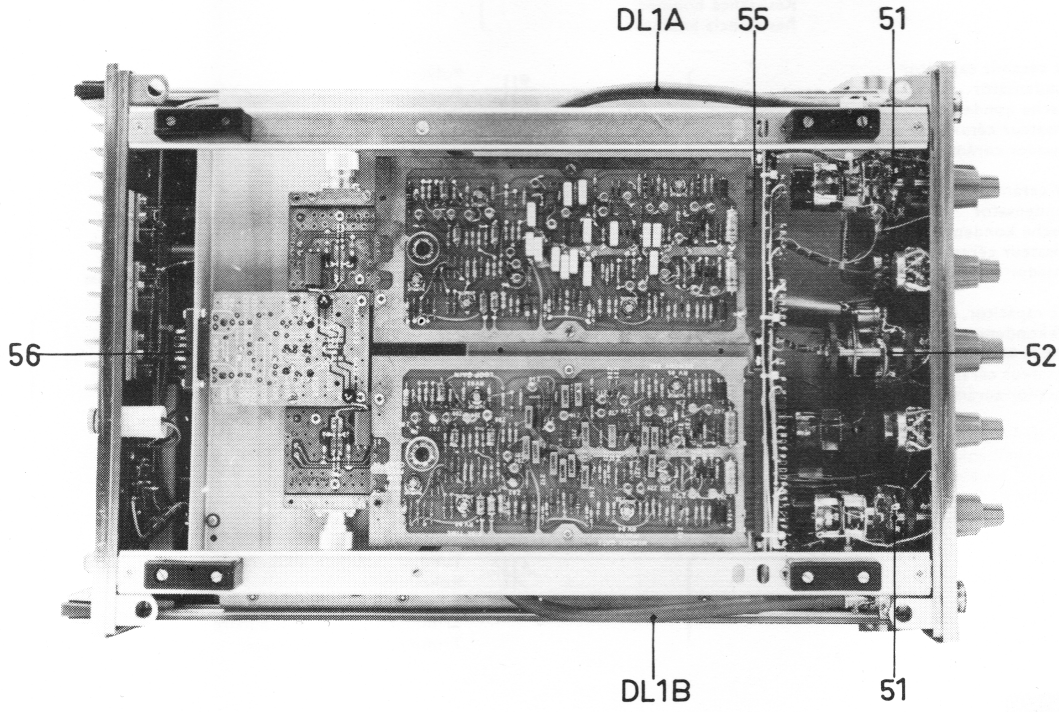

Fig. XIII-5 Bottom view showing item numbers

XIV. List of electrical parts

This parts list does not contain multi-purpose and standard parts. These components are indicated in the circuit diagram by means of identification marks. The specification can be derived from the survey below.



Carbon resistor E24 series
Kohleschichtwiderstand, Reihe E24
Koolweerstand E24 reeks
Résistance au carbone, série E24
Resistencia de carbón, serie E24
0,125 W 5%

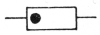

Carbon resistor E12 series
Kohleschichtwiderstand, Reihe E12
Koolweerstand E12 reeks
Résistance au carbone, série E12
Resistencia de carbón, serie E12
0,25 W ≦ 1 MΩ, 5%
> 1 MΩ, 10%



Carbon resistor E24 series
Kohleschichtwiderstand, Reihe E24
Koolweerstand E24 reeks
Résistance au carbone, série E24
Resistencia de carbón, serie E24
0,5 W ≦ 5 MΩ, 1%
> 5 ≦ 10 MΩ, 2%
> 10 MΩ, 5%



Carbon resistor E12 series
Kohleschichtwiderstand, Reihe E12
Koolweerstand E12 reeks
Résistance au carbone, série E12
Resistencia de carbón, serie E12
0,5 W ≦1,5MΩ, 5%
>1,5MΩ, 10%



Wire-wound resistor
Drahtwiderstand
Draadgewonden weerstand
Résistance bobinée
Resistencia bobinada
10 W 5%



Carbon resistor E12 series
Kohleschichtwiderstand, Reihe E12
Koolweerstand E12 reeks
Résistance au carbone, série E12
Resistencia de carbón, serie E12
1 W ≦ 2,2 MΩ, 5%
>2,2 MΩ, 10%

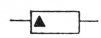

Carbon resistor E12 series
Kohleschichtwiderstand, Reihe E12
Koolweerstand E12 reeks
Résistance au carbone, série E12
Resistencia de carbón, serie E12
2 W 5%



Wire-wound resistor
Drahtwiderstand
Draadgewonden weerstand
Résistance bobinée
Resistencia bobinada
0,4 – 1,8 W 0,5%

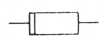

Wire-wound resistor
Drahtwiderstand
Draadgewonden weerstand
Résistance bobinée
Resistencia bobinada
5,5 W ≦ 200 Ω, 10%
>200 Ω, 5%



Tubular ceramic capacitor
Rohrkondensator
Keramische kondensator, buistype
Condensateur céramique tubulaire
Condensador cerámico tubular
500 V



Tubular ceramic capacitor
Rohrkondensator
Keramische kondensator, buistype
Condensateur céramique tubulaire
Condensador cerámico tubular
700 V

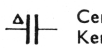

Ceramic capacitor, "pin-up"
Keramikkondensator "Pin-up" (Perltyp)
Keramische kondensator "Pin-up" type
Condensateur céramique, type perle
Condensador cerámico, versión "colgable"
500 V

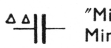

"Microplate" ceramic capacitor
Miniatur-Scheibenkondensator
"Microplate" keramische kondensator
Condensateur céramique "microplate"
Condensador cerámico "microplaca"
30 V

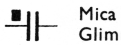

Mica capacitor
Glimmerkondensator
Micakondensator
Condensateur au mica
Condensador de mica
500 V

Polyester capacitor
Polyesterkondensator
Polyesterkondensator
Condensateur au polyester
Condensador polyester
400 V



Flat-foil polyester capacitor
Miniatur-Polyesterkondensator (flach)
Platte miniatuur polyesterkondensator
Condensateur au polyester, type plat
Condensador polyester, tipo de placas planas
250 V



Paper capacitor
Papierkondensator
Papierkondensator
Condensateur au papier
Condensador de papel
1000 V



Wire-wound trimmer
Drahttrimmer
Draadgewonden trimmer
Trimmer à fil
Trimmer bobinado



Tubular ceramic trimmer
Rohrtrimmer
Buisvormige keramische trimmer
Trimmer céramique tubulaire
Trimmer cerámico tubular



For multi-purpose and standard parts, please see PHILIPS' Service Catalogue.
Für die Universal- und Standard-Teile siehe den PHILIPS Service-Katalog.
Voor universele en standaardonderdelen raadplege men de PHILIPS Service Catalogus.
Pour les pièces universelles et standard veuillez consulter le Catalogue Service PHILIPS.
Para piezas universales y standard consulte el Catálogo de Servicio PHILIPS.

A. Resistors

Item	Code number	Value	%	Watt	Type
R1	4822 116 50173	49.9 Ω	1	0.4	Metal film
R2	4822 116 50173	49.9 Ω	1	0.4	Metal film
R3	4822 116 50173	49.9 Ω	1	0.4	Metal film
R4	4822 116 50173	49.9 Ω	1	0.4	Metal film
R5	4822 116 50173	49.9 Ω	1	0.4	Metal film
R6	4822 116 50459	10 Ω	1	0.4	Metal film
R7	4822 116 50904	30.1 Ω	1	0.4	Metal film
R8	4822 116 50173	49.9 Ω	1	0.4	Metal film
R9	4822 116 50746	100 Ω	1	0.4	Metal film
R10	4822 116 50761	301 Ω	1	0.4	Metal film
R11	4822 116 50847	499 Ω	1	0.4	Metal film
R12	4822 116 50568	4.99 Ω	1	0.4	Metal film
R13	4822 116 50902	15 Ω	1	0.4	Metal film
R14	4822 116 50903	24.9 Ω	1	0.4	Metal film
R15	4822 116 50173	49.9 Ω	1	0.4	Metal film
R16	4822 116 50751	150 Ω	1	0.4	Metal film
R17	4822 116 50174	249 Ω	1	0.4	Metal film
R36	4822 116 50631	4.53kΩ	1	0.4	Metal film
R37	4822 116 50899	453 Ω	1	0.4	Metal film
R38	4822 116 50827	402 Ω	1	0.4	Metal film
R39	4822 116 50173	49.9 Ω	1	0.4	Metal film
R40	4822 116 50847	499 Ω	1	0.4	Metal film
R41	4822 116 50573	1 kΩ	1	0.4	Metal film
R42	4822 116 50847	499 Ω	1	0.4	Metal film
R43	4822 116 50338	124 Ω	1	0.4	Metal film
R44	4822 116 50847	499 Ω	1	0.4	Metal film
R45	4822 116 50573	1 kΩ	1	0.4	Metal film
R45B	4822 116 50573	1 kΩ	1	0.4	Metal film
R101	4822 116 50173	49.9 Ω	1	0.4	Metal film
R104	4822 116 50896	47 Ω		0.05	Metal film
R105	4822 116 50896	47 Ω		0.05	Metal film
R119	4822 116 50538	3.32kΩ	1	0.5	Metal film
R120	4822 116 50794	4.32kΩ	1	0.4	Metal film
R129	4822 116 50901	976 Ω	0.25	0.85	Metal film
R136	4822 116 50385	4.75kΩ	1	0.4	Metal film
R137	4822 116 50749	1.40kΩ	1	0.4	Metal film
R141	4822 116 50385	4.75kΩ	1	0.4	Metal film
R148	4822 116 50901	976 Ω	0.25	0.85	Metal film
R149	4822 116 50521	56.2 Ω	1	0.4	Metal film
R210	4822 111 30337	100 MΩ	10		
R211	4822 111 30337	100 MΩ	10		
R220	4822 116 50174	249 Ω	1	0.4	Metal film
R221	4822 116 50657	6.81kΩ	1	0.4	Metal film
R222	4822 116 50559	27.4 kΩ	1	0.4	Metal film
R240	4822 116 50459	10 Ω	1	0.4	Metal film
R242	4822 116 50748	10 kΩ	1	0.4	Metal film
R243	4822 116 50748	10 kΩ	1	0.4	Metal film
R244	4822 116 50524	3.01kΩ	1	0.4	Metal film
R303	4822 116 50532	2.21kΩ	1	0.4	Metal film
R305	4822 116 50404	3.32kΩ	1	0.4	Metal film
R306	4822 116 50532	2.21kΩ	1	0.4	Metal film
R318	4822 116 50647	681 Ω	1	0.4	Metal film
R319	4822 116 50647	681 Ω	1	0.4	Metal film
R320	4822 116 50573	1 kΩ	1	0.4	Metal film
R321	4822 116 50573	1 kΩ	1	0.4	Metal film

Item	Code number	Value	%	Watt	Type
R322	4822 116 50573	1 kΩ	1	0.4	Metal film
R326	4822 116 50573	1 kΩ	1	0.4	Metal film
R327	4822 116 50573	1 kΩ	1	0.4	Metal film
R328	4822 116 50545	475 Ω	1	0.4	Metal film
R329	4822 116 50545	475 Ω	1	0.4	Metal film
R331	4822 116 50647	681 Ω	1	0.4	Metal film
R332	4822 116 50647	681 Ω	1	0.4	Metal film
R333	4822 116 50573	1 Ω	1	0.4	Metal film
R334	4822 116 50573	1 Ω	1	0.4	Metal film
R335	4822 116 50573	1 Ω	1	0.4	Metal film
R336	4822 116 50614	3.57kΩ	1	0.4	Metal film
R337	4822 116 50614	3.57kΩ	1	0.4	Metal film
R338	4822 116 50544	866 Ω	1	0.4	Metal film
R339	4822 116 50099	1.21kΩ	1	0.4	Metal film
R340	4822 116 50537	9.1 kΩ	1	0.4	Metal film
R353	4822 116 50518	1.1 kΩ	1	0.4	Metal film
R354	4822 116 50518	1.1 kΩ	1	0.4	Metal film
R355	4822 116 50752	1.50kΩ	1	0.4	Metal film
R356	4822 116 50257	1.96kΩ	1	0.4	Metal film
R357	4822 116 50257	1,96kΩ	1	0.4	Metal film
R358	4822 116 50752	1.50kΩ	1	0.4	Metal film
R359	4822 116 50573	1 kΩ	1	0.4	Metal film
R360	4822 116 50573	1 kΩ	1	0.4	Metal film
R361	4822 116 50103	3.92kΩ	1	0.4	Metal film
R362	4822 116 50532	2.21kΩ	1	0.4	Metal film
R363	4822 116 50573	1 kΩ	1	0.4	Metal film
R365	4822 116 50537	9.1 kΩ	1	0.4	Metal film
R406	4822 116 50103	3.92kΩ	1	0.4	Metal film
R407	4822 116 50404	3.32kΩ	1	0.4	Metal film
R423	4822 116 50748	10 kΩ	1	0.4	Metal film
R424	4822 116 50748	10 kΩ	1	0.4	Metal film
R509	4822 116 50897	18.2 kΩ	1	0.4	Metal film
R510	4822 116 50748	10 kΩ	1	0.4	Metal film
R519	4822 116 50898	9.31kΩ	1	0.4	Metal film
R520	4822 116 50538	3.32kΩ	1	0.4	Metal film
R808	4822 110 21209	6.8 MΩ			
R809	4822 110 21209	6.8 MΩ			
R810	4822 110 21209	6.8 MΩ			
R817	4822 110 21209	6.8 MΩ			
R818	4822 110 21209	6.8 MΩ	1	0.4	Metal film
R901	4822 116 50121	30.1 kΩ	1	1.3	Metal film
R902	4822 116 50121	30.1 kΩ	1	1.3	Metal film
R903	4822 116 50121	30.1 kΩ	1	1.3	Metal film
R904	4822 116 50121	30.1 kΩ	1	1.3	Metal film
R905	4822 116 50121	30.1 kΩ	1	1.3	Metal film
R906	4822 116 50121	30.1 kΩ	1	1.3	Metal film
R1008	4822 116 50608	6.19kΩ	1	0.4	Metal film
R1009	4822 116 50332	20 kΩ	1	0.4	Metal film
R1010	4822 116 50332	20 kΩ	1	0.4	Metal film
R1011	4822 116 50573	1 kΩ	1	0.4	Metal film
R1012	4822 116 50846	2.8 kΩ	1	0.4	Metal film
R1013	4822 116 50846	2.8 kΩ	1	0.4	Metal film
R1015	4822 116 50762	5.11kΩ	1	0.4	Metal film
R1016	4822 116 50762	5.11kΩ	1	0.4	Metal film
R1017	4822 116 50609	5.49kΩ	1	0.4	Metal film
R1018	4822 116 50609	5.49kΩ	1	0.4	Metal film
R1019	4822 116 50843	110 kΩ	1	0.4	Metal film
R1020	4822 116 50608	6.19kΩ	1	0.4	Metal film
R1032	4822 116 50103	3.92kΩ	1	0.4	Metal film
R1039	4822 116 50581	2.49kΩ	1	0.4	Metal film

Item	Code number	Value	%	Watt	Type
R1040	4822 116 50151	7.50kΩ	1	0.4	Metal film
R1042	4822 116 50748	10 kΩ	1	0.4	Metal film
R1044	4822 116 50573	1 kΩ	1	0.4	Metal film
R1045	4822 116 50537	9.09kΩ	1	0.4	Metal film
R1048	4822 116 50103	3.92kΩ	1	0.4	Metal film
R1050	4822 116 50332	20 kΩ	1	0.4	Metal film
R1051	4822 116 50532	2.21kΩ	1	0.4	Metal film
R1060	4822 116 50539	15 kΩ	1	0.4	Metal film
R1063	4822 116 50752	1.5 kΩ	1	0.4	Metal film
R1064	4822 116 50657	6.81kΩ	1	0.4	Metal film
R1071	4822 116 50752	1.5 kΩ	1	0.4	Metal film
R1072	4822 116 50752	1.5 kΩ	1	0.4	Metal film
R1074	4822 116 50404	3.32kΩ	1	0.4	Metal film
R1075	4822 116 50404	3.32kΩ	1	0.4	Metal film
R1089	4822 116 50101	2 kΩ	1	0.4	Metal film
R1090	4822 116 50101	2 kΩ	1	0.4	Metal film
R1201	4822 111 30323	270 Ω	5	0.1	Carbon
R1202	4822 111 30174	22 Ω	5	0.1	Carbon
R1203	4822 111 30174	22 Ω	5	0.1	Carbon
R1204	4822 111 20319	102 Ω	1	0.1	
R1205	4822 111 20319	102 Ω	1	0.1	
R1206	4822 111 30352	82 Ω	5	0.1	Carbon
R1207	4822 111 30331	470 Ω	5	0.1	Carbon
R1209	4822 111 30347	10 Ω	5	0.1	Carbon
R1211	4822 111 30331	470 Ω	5	0.1	Carbon
R1310	4822 112 20085	150 Ω	5	6	

B. VARIABLE RESISTORS

RV1	4822 102 10133	4.7 kΩ	20	0.125	Twin pot.
RV2		470 Ω			
RV3	4822 101 40075	2.5 kΩ			
RV4	4822 101 20112	47 kΩ	20	0.125	
RV5	4822 101 20082	4.7 MΩ	20	0.125	
RV6	4822 103 20088	47 kΩ	10	2	
RV7	4822 102 10132	1 kΩ	20	0.125	Twin pot.
RV8		220 kΩ			
RV9A	4822 102 30154	10 kΩ			Tandem pot.
RV9B		10 kΩ			
RV10A	4822 101 40075	2.5 kΩ			
RV10B	4822 101 40075	2.5 kΩ			
RV11A	4822 102 10134	47 kΩ			
RV12A		47 kΩ	20	0.125	Twin pot.
RV11B	4822 102 10134	47 kΩ			
RV12B		47 kΩ	20	0.125	Twin pot.
RV101	4822 100 10115	1 kΩ	20	0.5	
RV102	4822 100 10116	100 kΩ			
RV103	4822 100 10117	2.2 kΩ			
RV104	4822 100 10122	470 Ω			
RV105	4822 100 10115	1 kΩ			
RV201	4822 100 10122	470 Ω			
RV301	4822 100 10121	47 kΩ			
RV302	4822 100 10115	1 kΩ			
RV303	4822 100 10118	22 kΩ			
RV304	4822 100 10122	470 Ω			

Item	Code number	Value	%	Watt	Type
RV305	4822 100 10117	2.2 kΩ			
RV306	4822 100 10119	220 Ω			
RV307	4822 100 10115	1 kΩ			
RV308	4822 100 10119	220 Ω			
RV309	4822 100 10115	1 kΩ			
RV310	4822 100 10117	2.2 kΩ			
RV401	4822 100 10115	1 kΩ	20	0.5	
RV801	4822 100 10116	100 kΩ	20	0.5	
RV802	4822 100 10116	100 kΩ	20	0.5	
RV803	4822 101 20373	1 MΩ	20	0.5	
RV1001	4822 100 10112	1 kΩ	20	0.5	
RV1002	4822 100 10113	10 kΩ	20	0.5	
RV1003	4822 100 10114	4.7 kΩ	20	0.5	
RV1004	4822 100 10115	1 kΩ	20	0.5	
RV1005	4822 100 10114	4.7 kΩ	20	0.5	
RV1301	4822 100 10123	50 kΩ	20	0.5	
RV1302	4822 100 10112	1 kΩ	20	0.5	

C. CAPACITORS

Item	Code number	Value	%	Voltage rating	Type
C1	4822 121 40054	33 nF	20	40	
C2	4822 121 50077	1.8nF	1	63	
C3	4822 121 50442	6.8nF	1	63	
C4	4822 121 50279	15 nF	1	63	
C5	4822 121 40042	47 nF	10	250	
C6	4822 121 40036	100 nF	10	250	
C7	4822 121 40194	220 nF	10	250	
C8	4822 123 10227	12 pF±1pF			
C9	4822 123 10228	68 pF±1pF			
C10	4822 121 50023	180 pF	1	125	
C11	4822 121 50495	379 pF	1	125	
C12	4822 121 50494	976 pF	1	63	
C13	4822 121 50493	1,980 pF	1	63	
C14	4822 121 50493	1,980 pF	1	63	
C15	4822 121 50097	10 nF	1	63	
C16	4822 121 50345	20 nF	1	63	
C17	4822 121 50345	20 nF	1	63	
C18	4822 121 40302	100 nF	1		
C19	4822 121 40302	100 nF	1		
C20	4822 121 40303	150 nF	1		
C21	4822 121 40303	150 nF	1		
C22	Selected value *)	1 pF±0.25pF			
C25	4822 124 20494	4.7μF		63	Electrolytic
C101	4822 124 20374	47 μF		40	Electrolytic
C102	4822 124 20374	47 μF		40	Electrolytic

*) See para. G at the end of this chapter.

Item	Code number	Value	%	Voltage rating	Type
C103	4822 122 30034	470 pF	10	40	
C104	4822 121 40059	100 nF	10	100	
C105	4822 121 40059	100 nF	10	100	
C106	4822 122 30122	150 nF	20	40	
C107	4822 122 30043	10 nF		35	
C108	4822 122 30006	10 pF			
C109	4822 121 40059	100 nF	10	100	
C110	4822 122 30016	33 pF			
C111	4822 121 50432	1.5nF	1	63	
C112	4822 121 50432	1.5nF	1	63	
C113	4822 121 40197	1 µF		100	
C114	4822 122 30043	10 nF		35	
C115	4822 122 30043	10 nF		35	
C116	4822 122 30099	3.3nF	10	100	
C118	4822 122 30027	1 nF	10	40	
C201	4822 124 20374	47 µF		40	Electrolytic
C202	4822 124 20374	47 µF		40	Electrolytic
C203	4822 121 50059	560 pF	1	125	
C204	4822 121 40059	100 nF	10	100	
C205	4822 121 50371	220 pF	1	125	
C206	4822 122 30043	10 nF			
C207	4822 121 50059	560 pF	1	125	
C208	4822 121 40059	100 nF	10	100	
C209	4822 121 40059	100 nF	10	100	
C210	4822 122 30006	10 pF			
C211	4822 122 30016	33 pF			
C212	4822 122 30006	10 pF			
C213	4822 122 30011	2 pF			
C214	4822 121 40059	100 nF	10	100	
C301	4822 121 50367	680 pF	1	125	
C302	4822 121 50371	220 pF	1	125	
C303	4822 121 50371	220 pF	1	125	
C304	4822 121 40059	100 nF	10	100	
C305	4822 121 50368	820 pF	1	63	
C306	4822 124 20374	47 µF		40	Electrolytic
C307	4822 124 20374	47 µF		40	Electrolytic
C401	4822 121 50411	100 pF	1	125	
C402	4822 124 20374	47 µF		40	Electrolytic
C403	4822 121 50424	1 nF	1	63	
C404	4822 124 20374	47 µF		40	Electrolytic
C501	4822 124 20059	6.4µF		150	Electrolytic
C502	4822 124 20374	47 µF		40	Electrolytic
C503	4822 124 20059	6.4µF		150	Electrolytic
C504	4822 124 20385	100 µF		16	Electrolytic
C601	4822 124 70016	100 µF		150	Electrolytic
C602	4822 124 70024	2500 µF		64	Electrolytic
C603	4822 124 70214	3200 µF		16	Electrolytic
C604	4822 124 70024	2500 µF		64	Electrolytic
C701	4822 124 20374	47 µF		40	Electrolytic
C702	4822 121 50419	33 nF	1	125	
C703	4822 122 50001	5.1nF	20	3000	
C704	4822 122 50001	5.1nF	20	3000	
C705	4822 122 50001	5.1nF	20	3000	
C710	4822 121 40059	100 nF	10	250	
C801	4822 124 20436	6.4µF		300	Electrolytic
C802	4822 122 50001	5.1nF	20	3000	
C803	4822 122 50001	5.1nF	20	3000	
C804	4822 121 40059	100 nF	10	100	
C805	4822 122 50001	5.1nF	20	3000	
C806	4822 122 50001	5.1nF	20	3000	

Item	Code number	Value	%	Voltage rating	Type
C807	4822 122 50001	5.1nF	20	3000	
C1001	4822 121 40059	100 nF	10	100	
C1002	4822 124 20353	10 µF		63	Electrolytic
C1003	4822 121 50432	1.5nF	1	63	
C1004	4822 121 50432	1.5nF	1	63	
C1005	4822 121 50368	820 pF	1	63	
C1006	4822 124 20353	10 µF		63	Electrolytic
C1007	4822 122 30027	1 nF	10	100	
C1008	4822 124 20362	22 µF		25	Electrolytic
C1009	4822 122 30103	1.2pF		63	
C1010	4822 124 20362	22 µF		25	Electrolytic
C1011	4822 122 30016	33 pF	2	63	
C1012	4822 124 20362	22 µF		25	Electrolytic
C1013	4822 122 30023	68 pF	2	63	
C1014	4822 121 40059	100 nF	10	100	
C1015	4822 121 40059	100 nF	10	100	
C1016	4822 121 40059	100 nF	10	100	
C1017	4822 121 40059	100 nF	10	100	
C1018	4822 121 40059	100 nF	10	100	
C1019	4822 121 40059	100 nF	10	100	
C1020	4822 122 30023	68 pF	2	63	
C1021	4822 121 40059	100 nF	10	100	
C1022	4822 121 40059	100 nF	10	100	
C1023	4822 121 40059	100 nF	10	100	
C1024	4822 121 40059	100 nF	10	100	
C1026	4822 121 40059	100 nF	10	100	
C1027	4822 121 50411	100 pF	1	125	
C1028	4822 121 40059	100 nF	10	100	
C1029	4822 121 50409	270 pF	1	125	
C1030	4822 121 50367	680 pF	1		
C1031	4822 121 40059	100 nF	10	100	
C1032	4822 121 50411	100 pF	1	125	
C1033	4822 121 50409	270 pF	1	125	
C1034	4822 122 30006	10 pF		63	
C1035	4822 124 20374	47 µF		40	Electrolytic
C1036	4822 124 20374	47 µF		40	Electrolytic
C1101	4822 122 30118	10 pF	5	100	
C1102	4822 122 30118	10 pF	5	100	
C1201	4822 122 30121	120 pF	5	100	
C1202	4822 122 30119	12 pF	5	100	
C1301	4822 121 40059	100 nF	10	250	
C1302	4822 121 40059	100 nF	10	250	
C1303	4822 122 30117	100 pF	5	200	
C1304	4822 122 30008	47 pF	2	63	
C1305	4822 122 30117	100 pF	5	200	
C1306	4822 122 30027	1 nF	10	100	
C1307	4822 121 40059	100 nF	10	100	
C1308	4822 121 40059	100 nF	10	100	
C1309	4822 122 30027	1 nF	10	100	

D. VARIABLE CAPACITORS

CV1	4822 125 50054	2.5-6pF
CV2	4822 125 50053	4.5-20pF

E. MISCELLANEOUS

1. Coils

Item	Code number	Value	%	Type
L101	4822 158 10052			
L102	4822 158 10052			
L103	4822 526 10025			Ferroxcube tube
L104	4822 158 10282	0.33μH		
L201	4822 158 10052			
L202	4822 158 10052			
L301	4822 158 10052			
L302	4822 158 10052			
L501	4822 158 10284	47 μH	25	
L701	4822 158 30165			
L702	4822 158 30165			
L703	4822 158 30166			
L1001	4822 158 10243	100 μH	25	
L1002	4822 158 10243	100 μH	25	
L1003	4822 158 10278	1 mH	25	
L1004	4822 158 10278	1 mH	25	
L1005	4822 158 10052			
L1006	4822 158 10052			
L1101	4822 526 10011			Ferroxcube tube
L1102	4822 526 10011			Ferroxcube tube
L1201	4822 158 10312	220 nH	10	
L1301	4822 526 10011			Ferroxcube tube
L1302	4822 526 10011			Ferroxcube tube
L1303	4822 526 10011			Ferroxcube tube
L1304	4822 526 10011			Ferroxcube tube

2. Transformers

Item	Code number	
T1	4822 146 40193	
T2	4822 158 10313	
T3A	4822 158 10314	
T3B	4822 158 10314	
T701	4822 145 70042	
T1001	4822 158 30167	
T1101	4822 158 10315	
T1301	4822 158 10326	
T1302	4822 526 10044	(core only)

3. Printed-wiring boards with components

Item	Code number	Item	Code number
CB1	4822 216 50162	CB8	4822 216 50168
CB2	4822 216 50163	CB9	4822 216 50172
CB3	4822 216 50164	CB10	4822 216 50169
CB4	4822 216 50165	CB11	4822 216 50173
CB5	4822 216 50166	CB12	4822 216 50207
CB6	4822 216 50167	CB13	4822 216 50171
CB7	4822 216 50174		

4. Assemblies

Code number	Description
4822 219 80204	Voltage tripler
4822 320 40035	Delay line with terminals (DL1A, DL1B)

5. C.R.T. and lamps

Item	Code number	Description
	4822 131 20031	Cathode-ray tube type D14-120GR/37
LA1	4822 134 40199	Pilot lamp type 12829
LA2, 3	4822 134 40054	Graticule illumination lamps 6828
LA801, 803	4822 134 20016	Neon lamp GL8

F. SEMICONDUCTORS

1. Transistors

Type	Ordering code	Items
BC107B	4822 130 40332	Z110, Z112, Z126, Z133, Z204, Z211, Z212, Z215, Z222, Z304, Z325, Z326, Z327, Z328, Z329, Z330, Z333, Z334, Z335, Z336, Z339, Z340, Z345, Z346, Z347, Z402, Z403, Z405, Z406, Z410, Z412, Z505, Z511, Z512, Z513, Z1001, Z1003, Z1004, Z1006, Z1017, Z1018, Z1025, Z1028, Z1029, Z1042.
BC177	4822 130 40522	Z121, Z123, Z210, Z213, Z214, Z220, Z221, Z331, Z332, Z413,
alternative type:		
BCY70	4822 130 40324	Z414, Z1007, Z1009, Z1010, Z1016, Z1019, Z1026, Z1034, Z1043.
BCY70	4822 130 40324	Z306, Z307, Z308. (when replacing Z307-308, use BC177)
BF115	4822 130 40308	Z1008, Z1011.
BF179	4822 130 40661	Z313, Z314, Z337, Z338, Z503, Z1301.
BF183	4822 130 40832	Z132.
BFW10	4822 130 40443	Z1005, Z1030, Z1031.
BFW92	4822 130 40745	Z101, Z102, Z103.
BFY50	4822 130 40294	Z401, Z411, Z510.
BSW67	4822 130 40747	Z502, Z701, Z702.
BSX20	4822 130 40417	Z106, Z111, Z113, Z116, Z117, Z201, Z217, Z218, Z301, Z303, Z802.
2N2484	4822 130 40179	Z506.
2N3905	4822 130 40171	Z127, Z136.

2. Selected transistors

Type	Ordering code	Items
2N709	4822 130 40742	Z109.
2N709	4822 130 40183	Z128.
	4822 130 40743	Z1302.

3. Diodes

BA148	4822 130 30256	Z703, Z704, Z705, Z706, Z801.
BAX13	4822 130 40182	Z5, Z6, Z114, Z122, Z125, Z134, Z135, Z202, Z203, Z205, Z206, Z207, Z216, Z219, Z223, Z302, Z305, Z309, Z310, Z315, Z316, Z317, Z318, Z319, Z320, Z321, Z322, Z323, Z324, Z341, Z342, Z343, Z344, Z404, Z415, Z416, Z507, Z803, Z1002, Z1012, Z1013, Z1014, Z1015, Z1020, Z1021, Z1022, Z1023, Z1027, Z1036.
BAY82	4822 130 30202	Z108, Z119, Z120.
BY126	4822 130 30192	Z409, Z417, Z501, Z508, Z509, Z514, Z601, Z602, Z603, Z604, Z605, Z606, Z607, Z608.
BY140	4822 130 30296	Z707, Z708, Z709, Z710, Z711.
BZY88/C3V3	4822 130 30392	Z504, Z1041.
BZY88/C5V6	4822 130 30193	Z407.
BZY88/C6V8	4822 130 30079	Z311, Z321.
BZY88/C7V5	4822 130 30287	Z124.
BZY88/C9V1	4822 130 30294	Z4 , Z1024, Z1035.
BZY88/C11	4822 130 30557	Z107.
BZY88/C15	4822 130 30292	Z137.
HP-5082-2800	4822 130 30635	Z135, Z135.
SE708	4822 130 30761	Z1037, Z1038.
TD253A	4822 130 40175	Z105.
TD253B	4822 130 30636	Z104.
1N3718	4822 130 30637	Z131.

4. Selected diodes

4822 130 30629	Z1201 + Z1202 (selected pair of sampling diodes)
4822 130 30631	Z1303 (selected snap-off diode)

G. VALUES OF C22

One of the following values must be chosen for C22:

0.47 pF ±0.25 pF	code number	4822 122 40069
0.68 pF ±0.25 pF	code number	4822 122 40071
1 pF ±0.25 pF	code number	4822 122 40019
1.5 pF ±0.25 pF	code number	4822 122 40074
2.2 pF ±0.25 pF	code number	4822 122 40014

The selection procedure is described in chapter XI. CHECKING AND ADJUSTING, para. 12.3.2 of the Service Manual.

XV. Version PM 3400-01

This Service Manual is based on instruments of the series /02 and following.
Instruments of the /01 series differ from those of the later series in the following respects:

1. The transistors on printed-wiring cards 1 and 3 have been soldered to the board.
2. PM 3400-3 MIXER DFL. AMPL.
   The different part of the circuit diagram is shown in Fig. XV-1. Moreover, the value of the following components is different.

Item	Value	Code number
R318	omitted	
R336	2.7 kΩ	4822 116 50007
R337	2.7 kΩ	4822 116 50007
R338	432 Ω	4822 116 50974
R340	8.2 kΩ	4822 116 50152
R365	8.2 kΩ	4822 116 50152

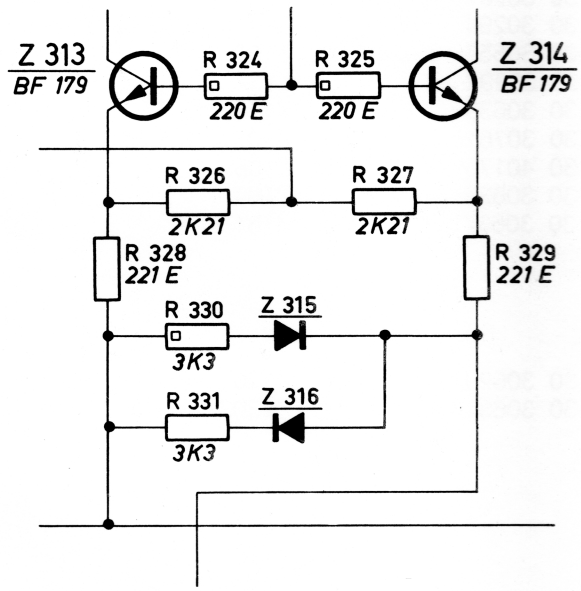

Fig. XV-1 Differences between /01 version and further versions

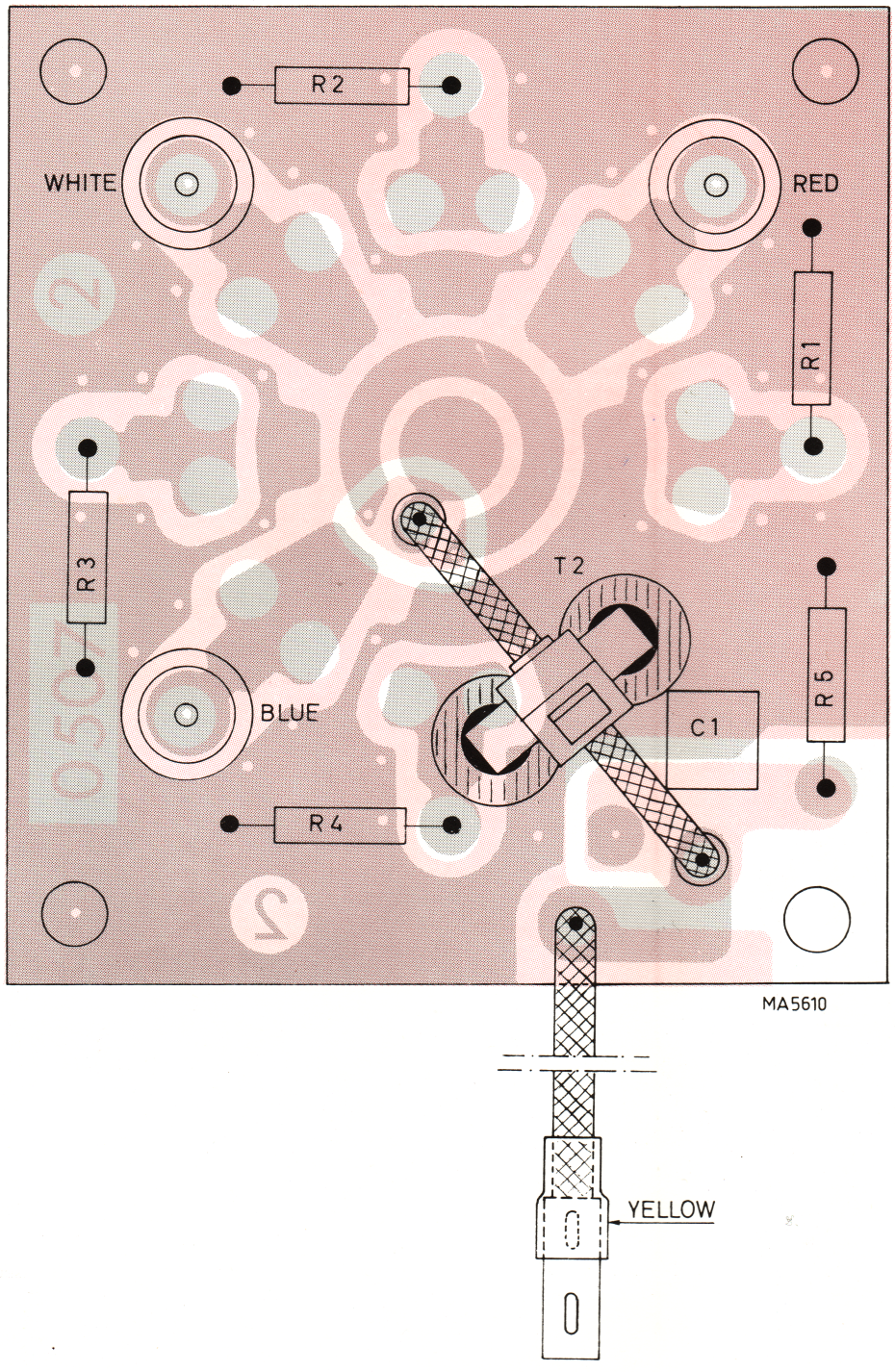

Fig. XVI-1 Switch S1, trigger selector

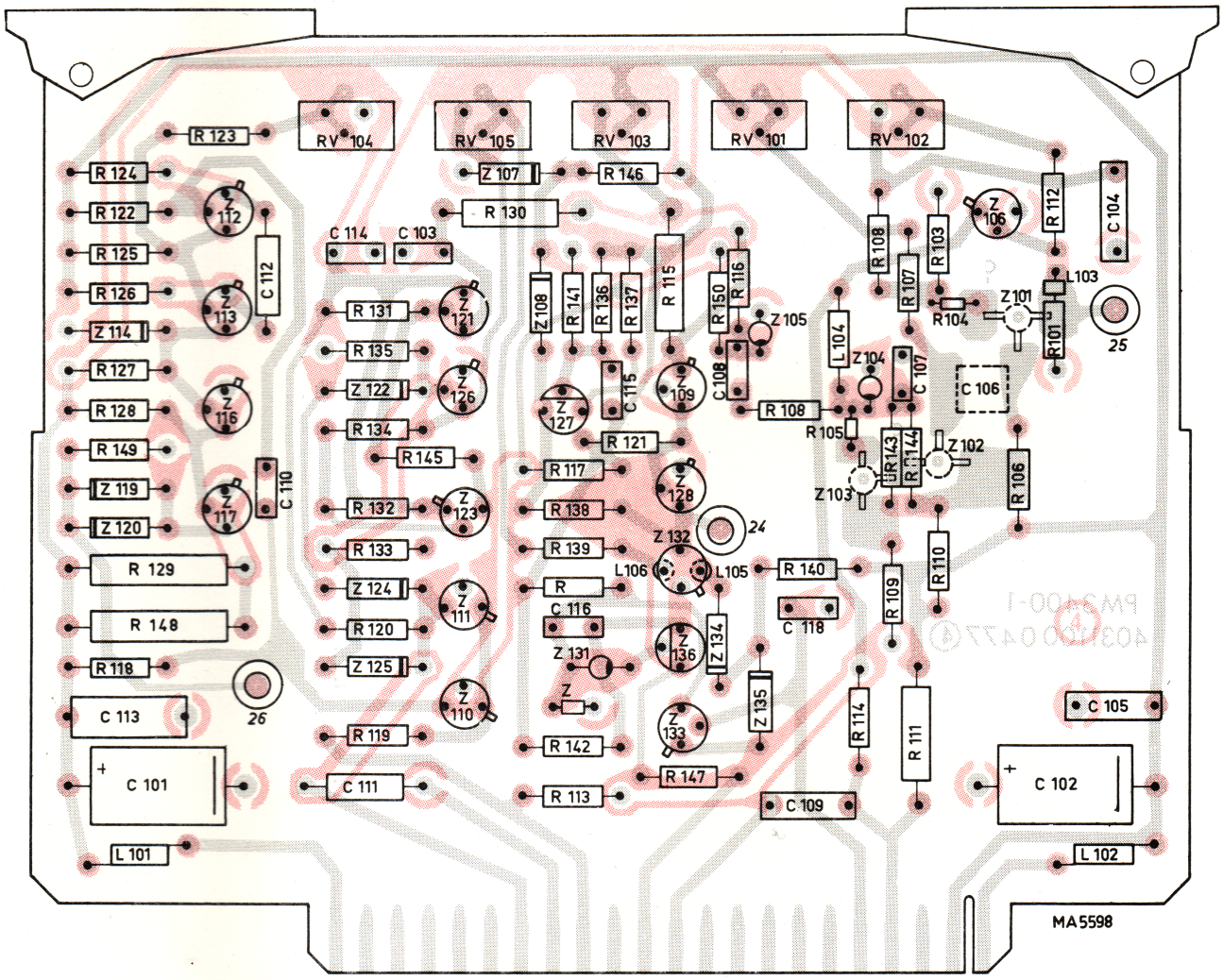

Fig. XVI-2 Unit PM3400-1, trigger and time-base circuits

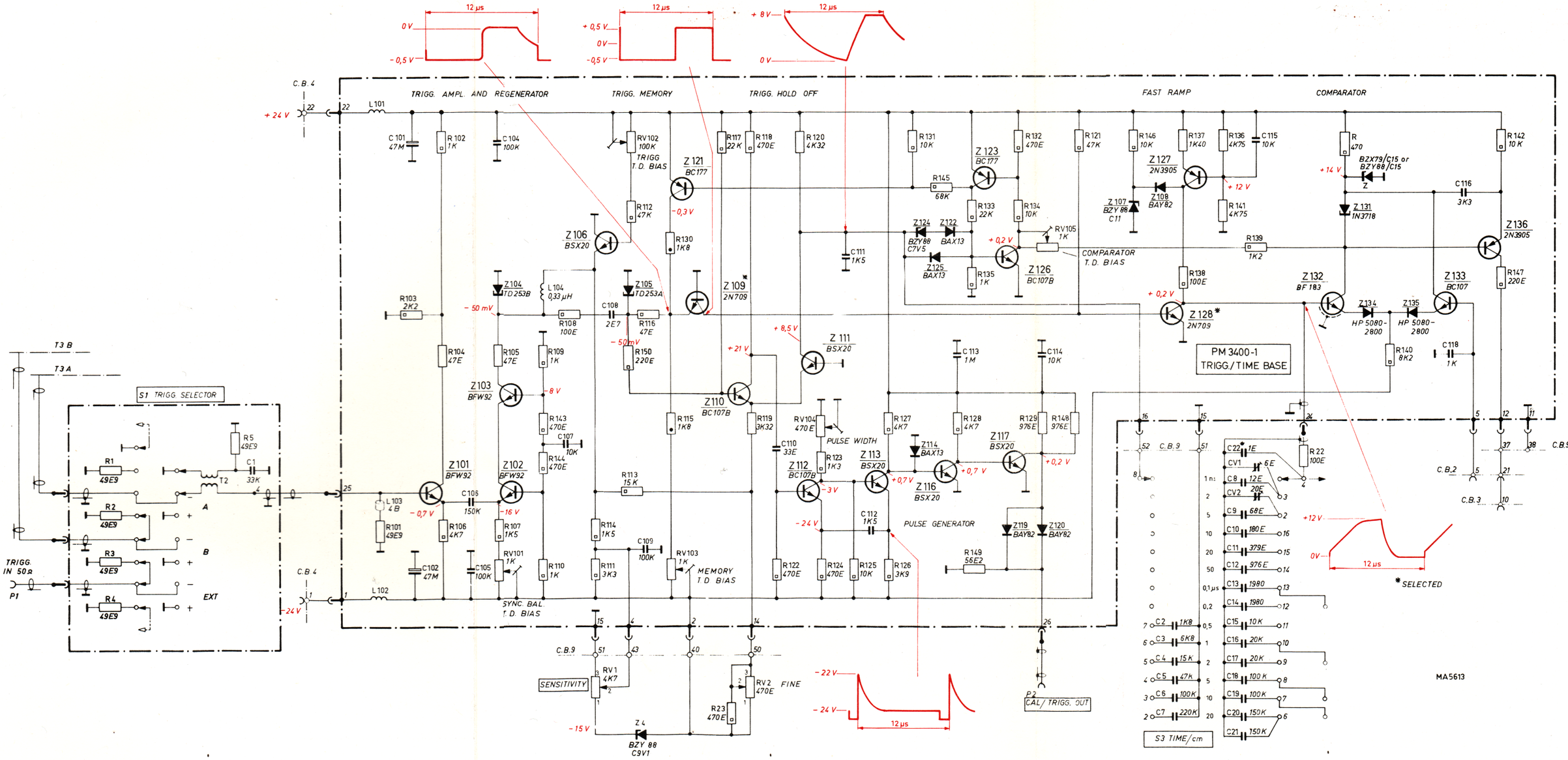

Fig. XVI-3 Diagram of trigger and time-base circuits

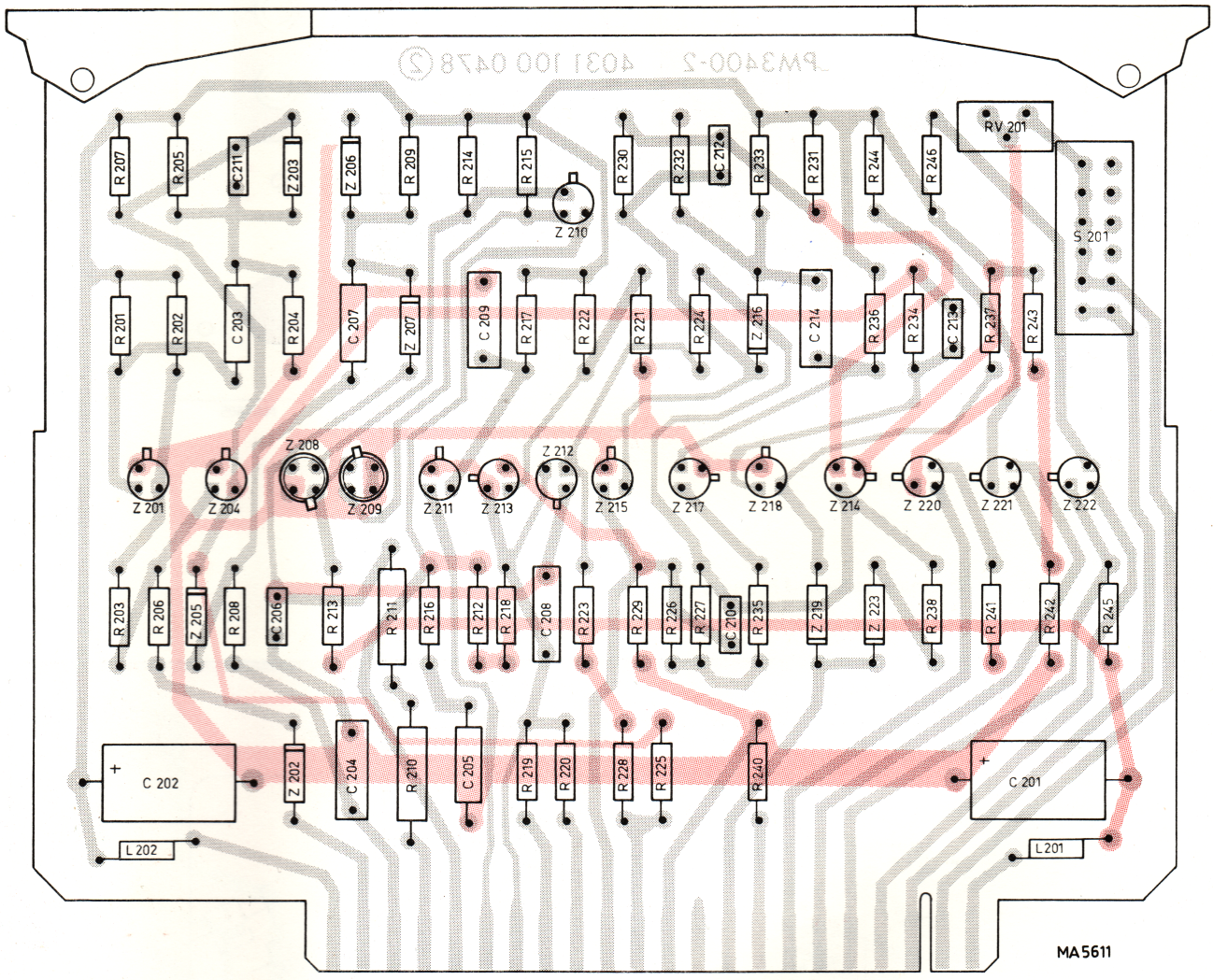

Fig. XVI-4 Unit PM 3400-2, staircase generator

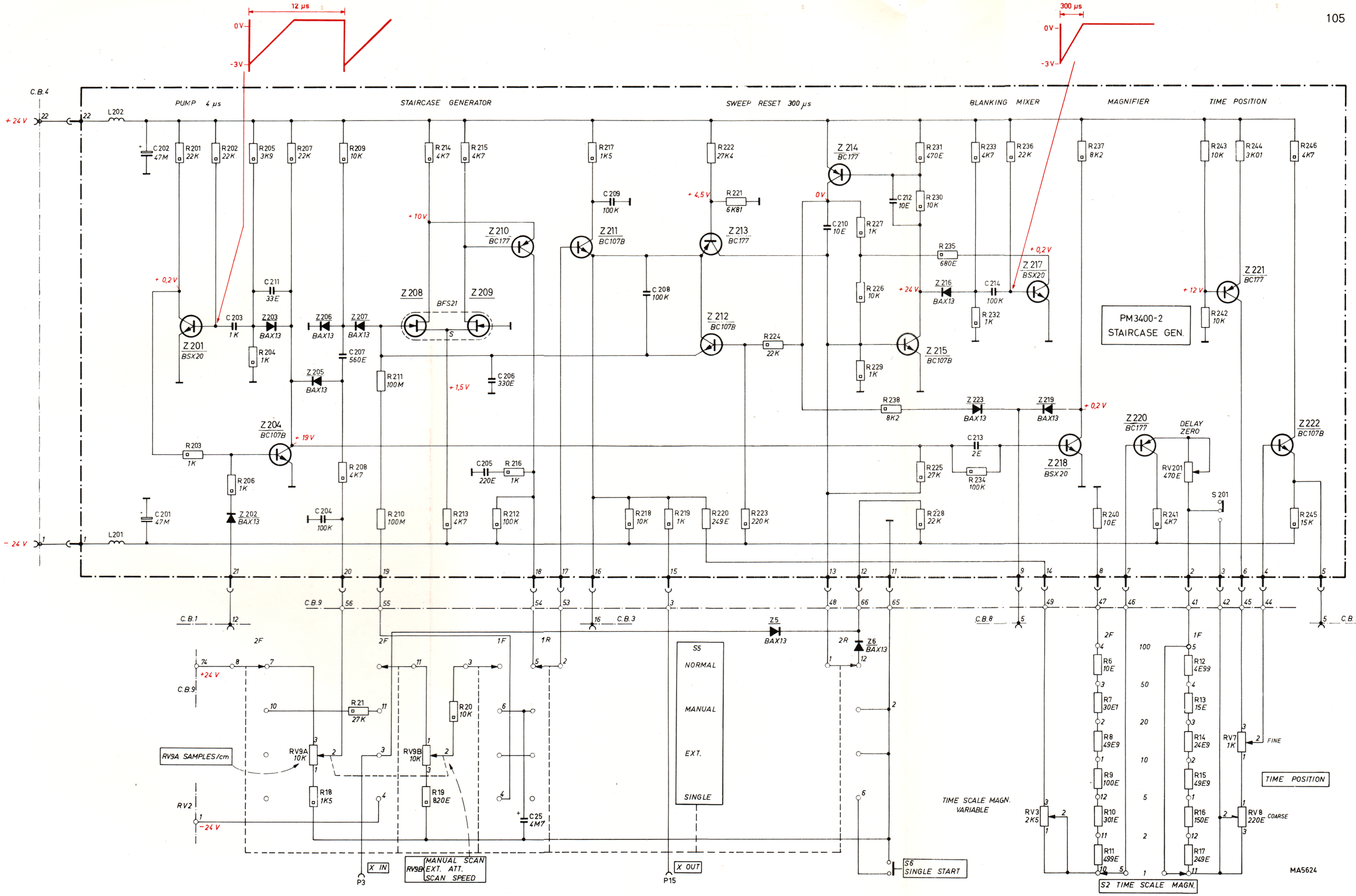

Fig. XVI-5 Diagram of staircase generator

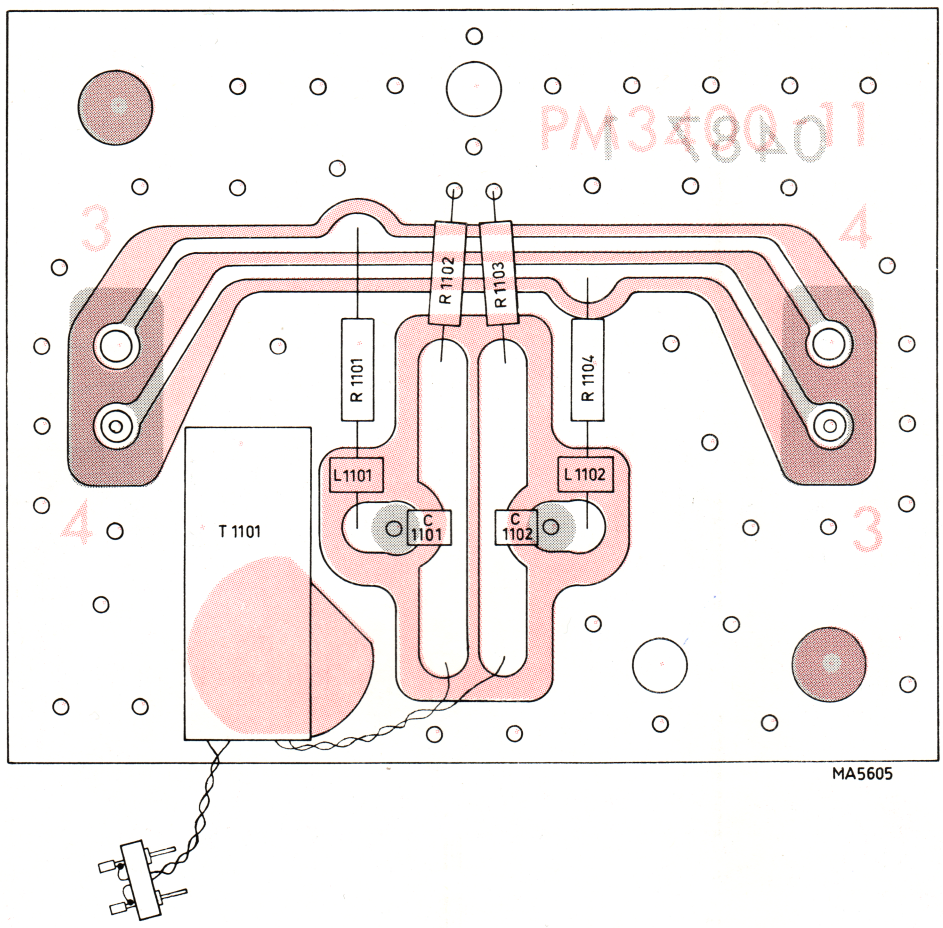

Fig. XVI-6 Unit PM 3400-11, sampling gate

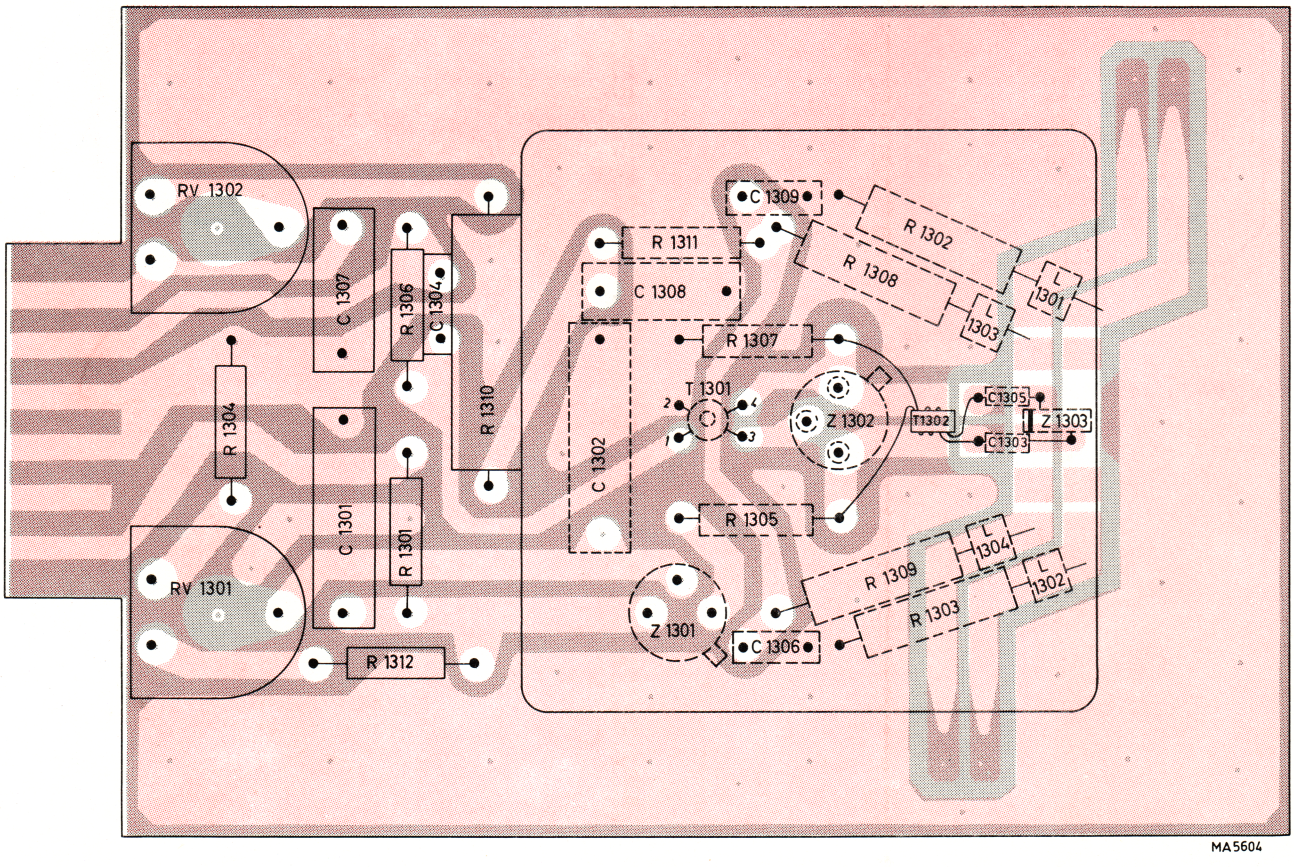

Fig. XVI-7 Unit PM 3400-13, sampling-pulse generator

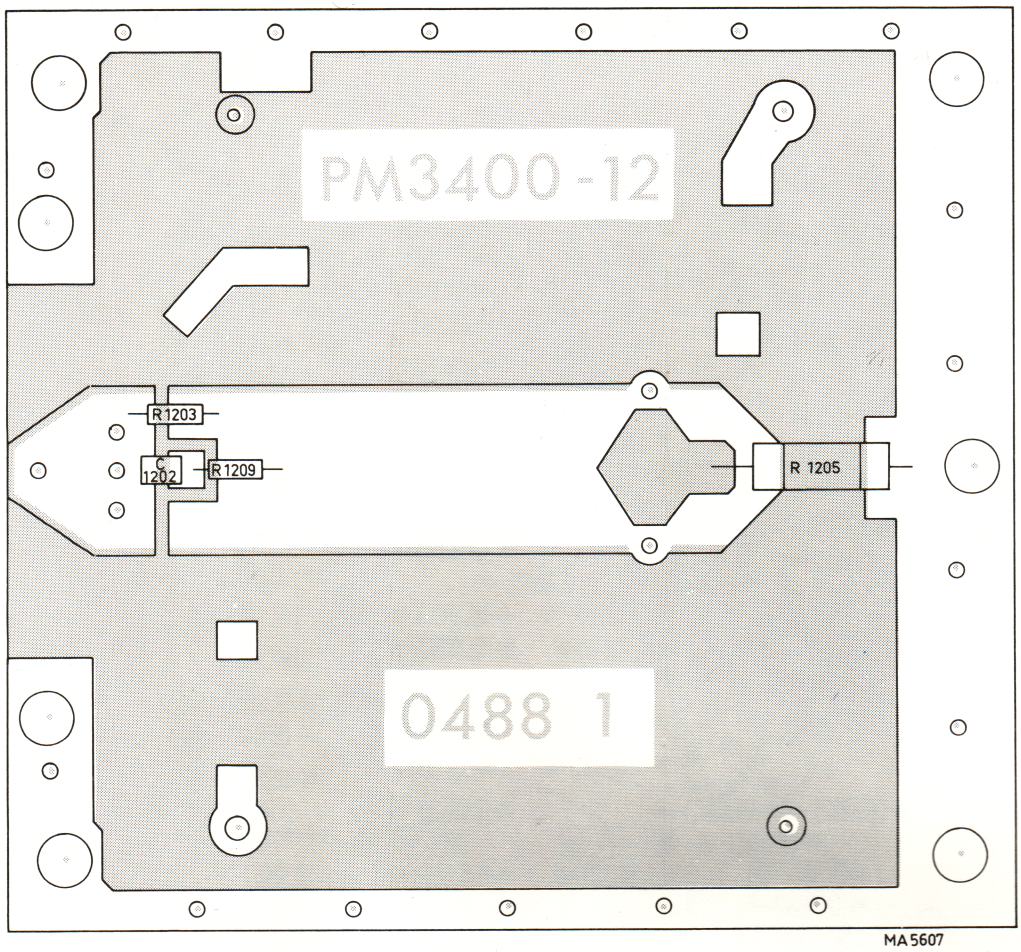

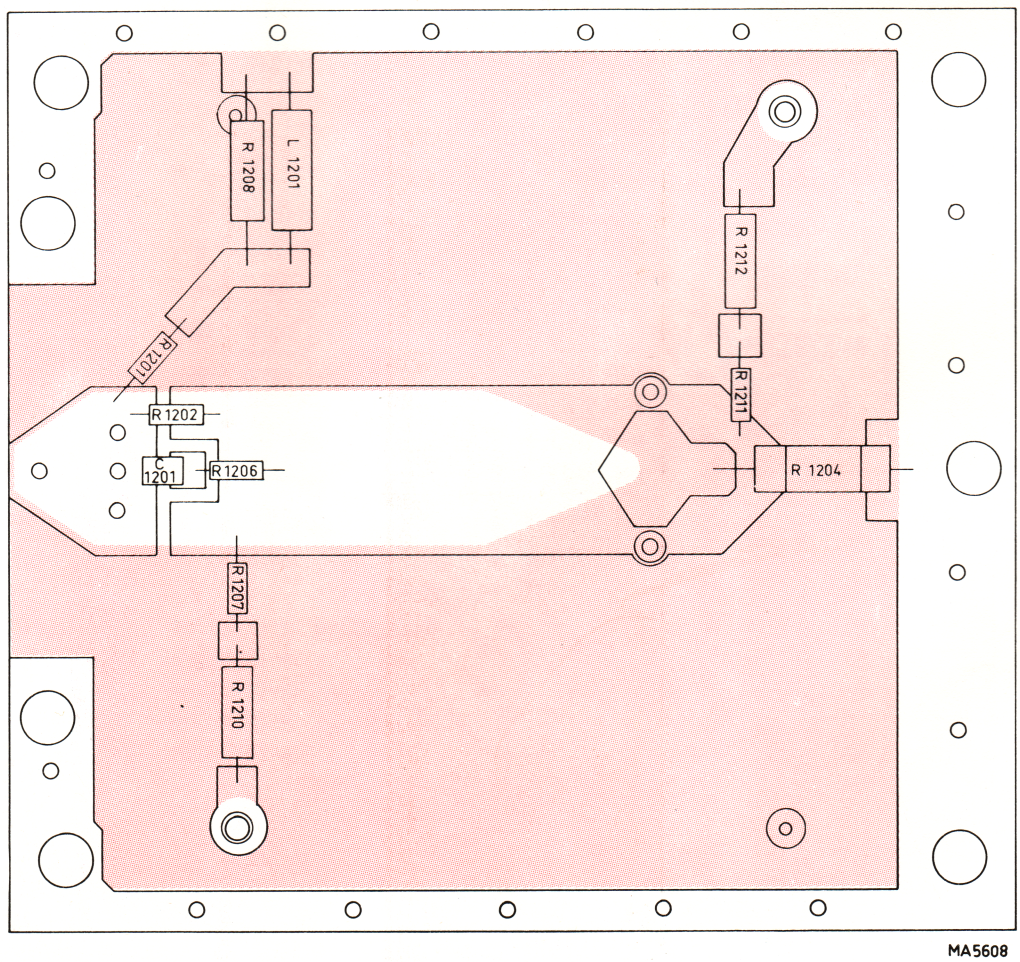

Fig. XVI-8 Unit PM 3400-12, h.f. compensation

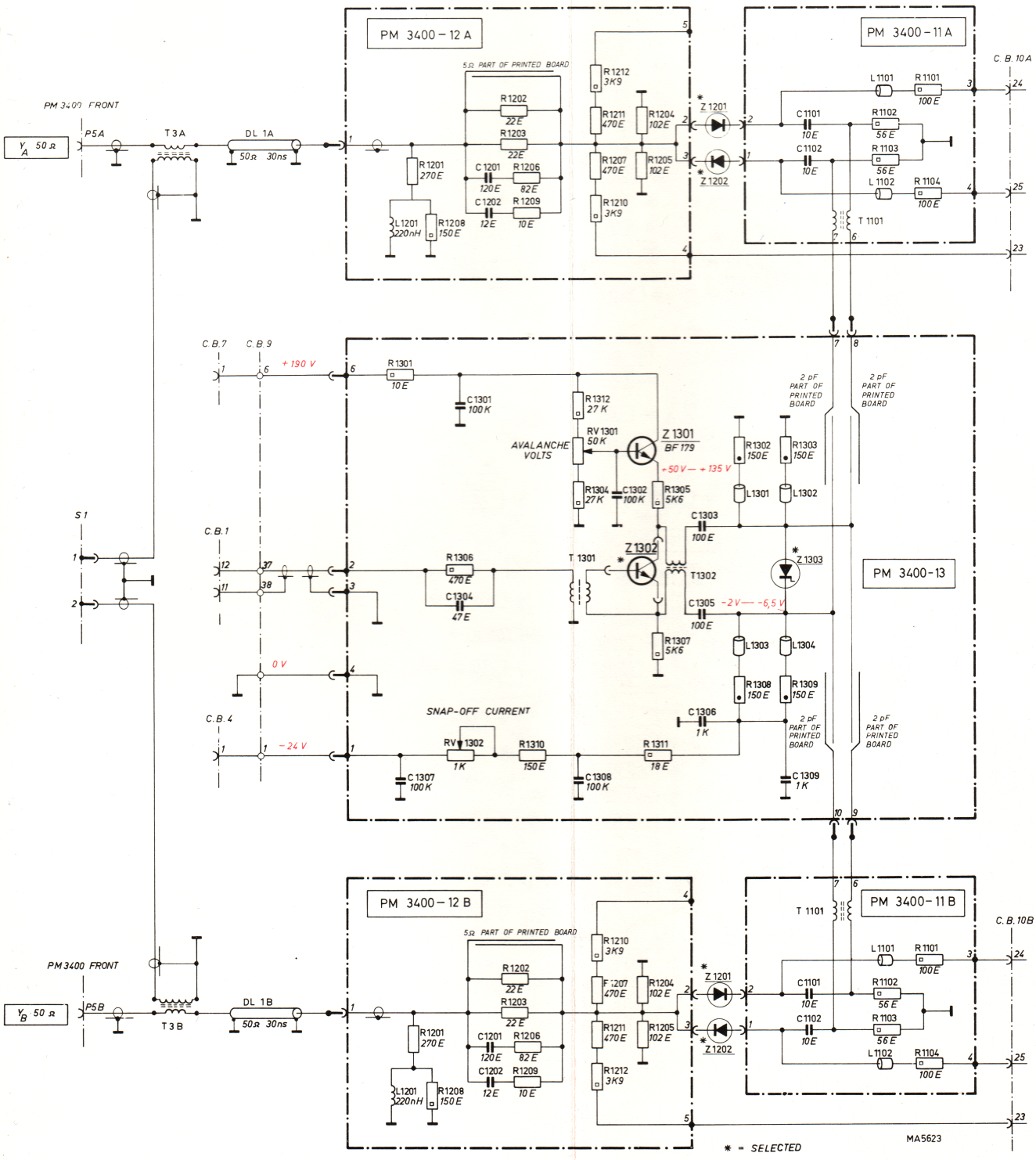

Fig. XVI-9 Diagram of sampling gate, h.f. compensation and pulse generator

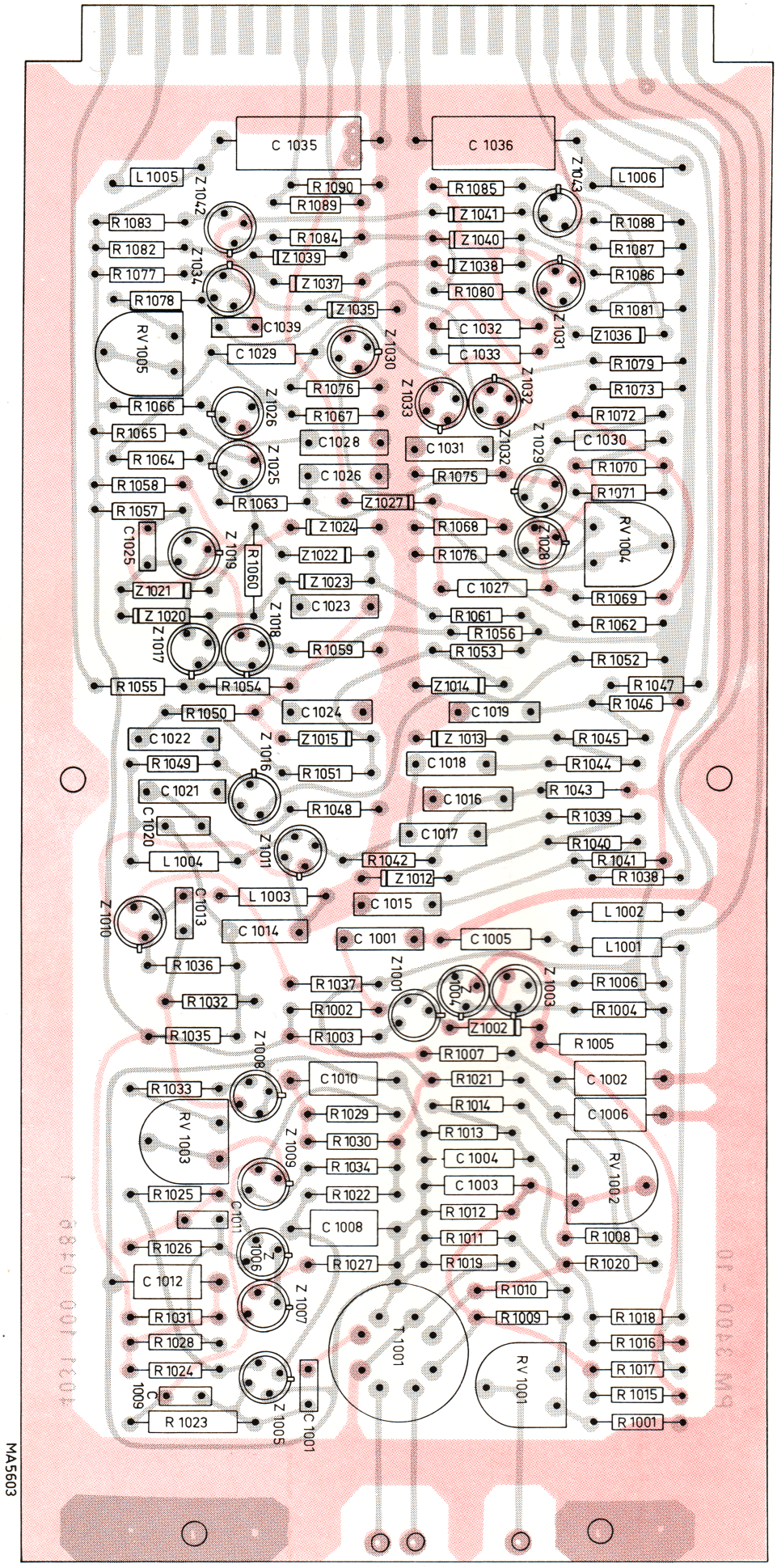

Fig. XVI-10 Unit PM 3400-10, sampling amplifier

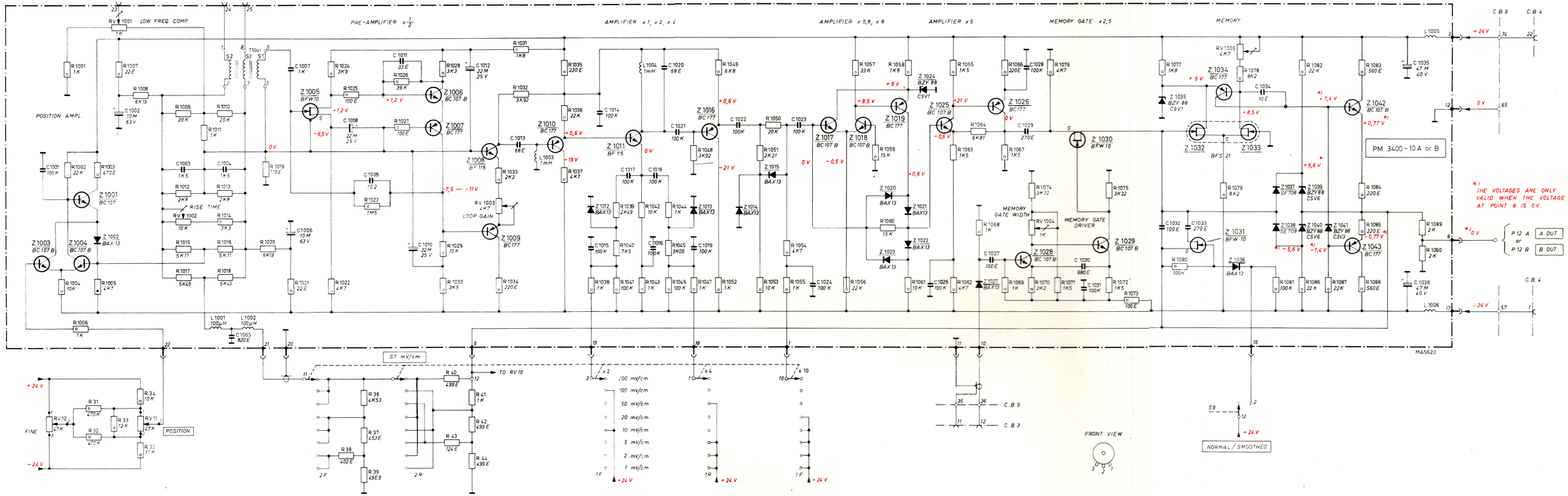

Fig. XVI-11 Diagram of sampling amplifier

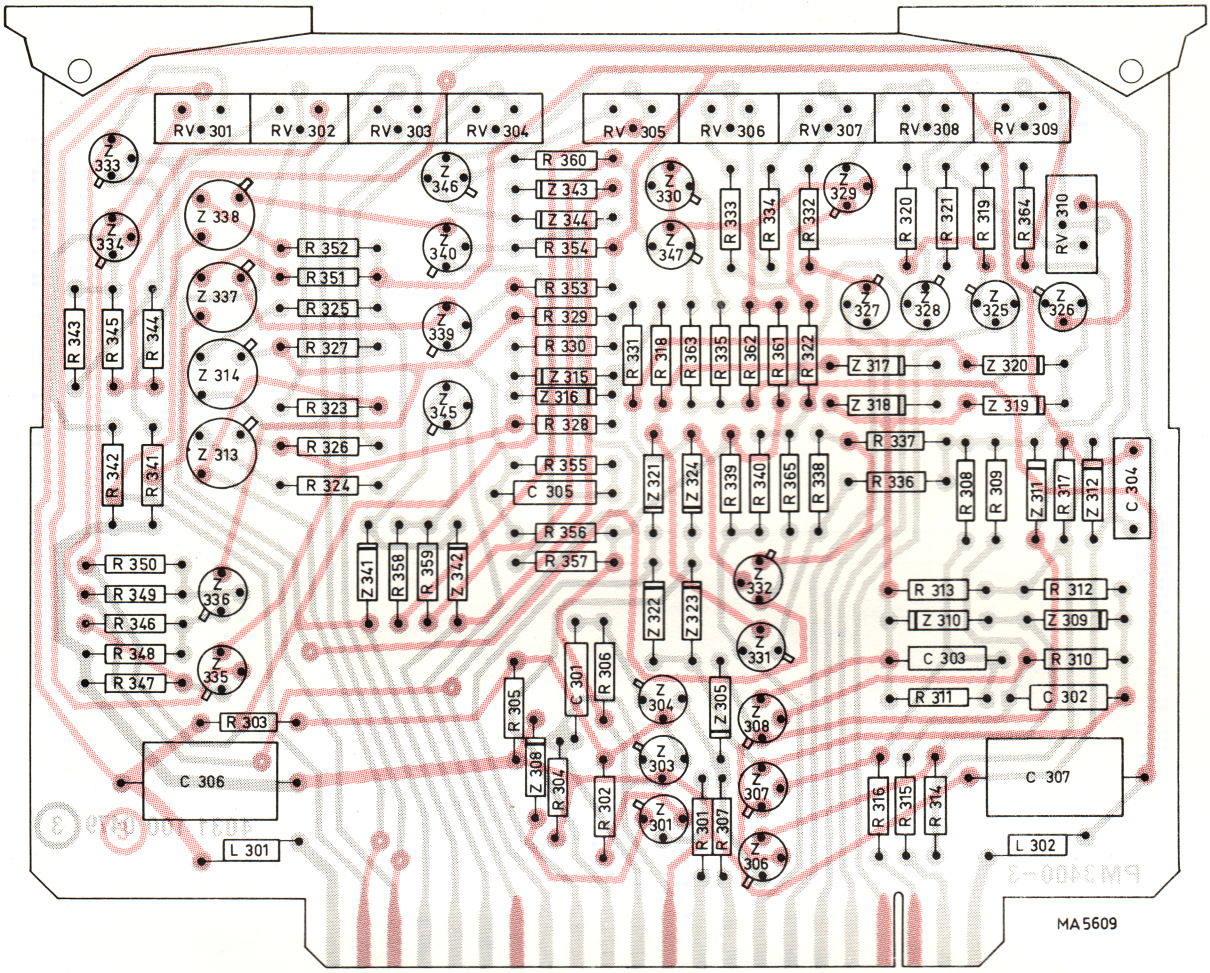

Fig. XVI-12 Unit PM 3400-3, mixer/deflection amplifier

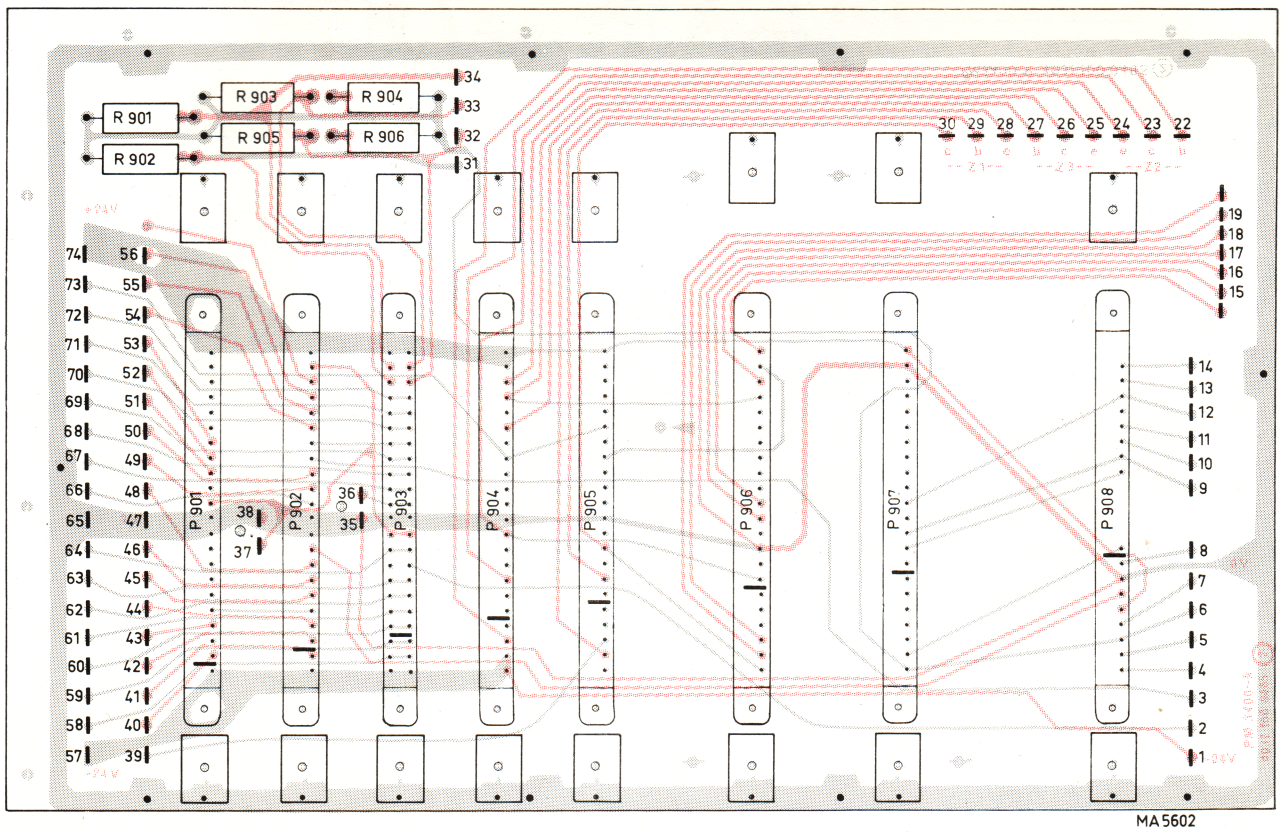

Fig. XVI-13 Unit PM 3400-9, printed-wiring board

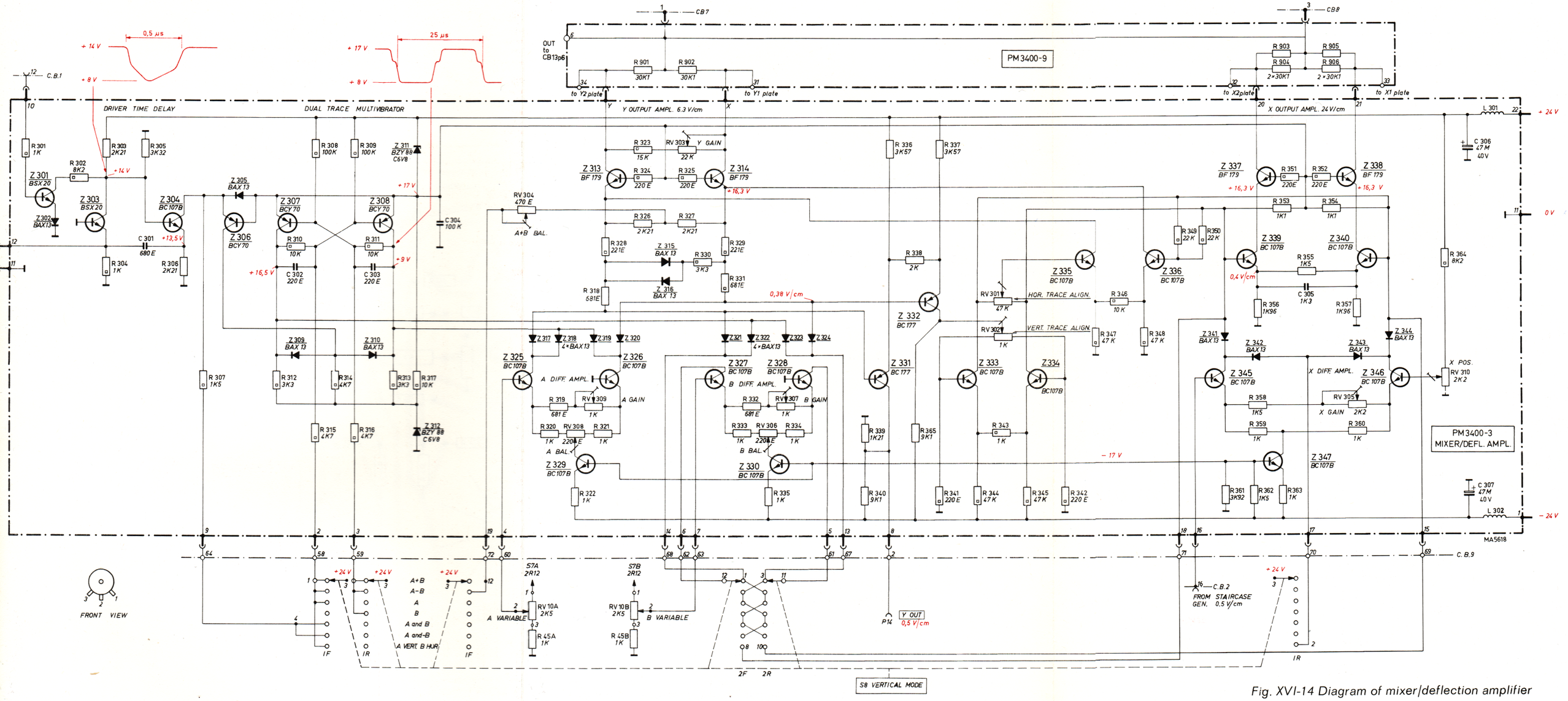

Fig. XVI-14 Diagram of mixer/deflection amplifier

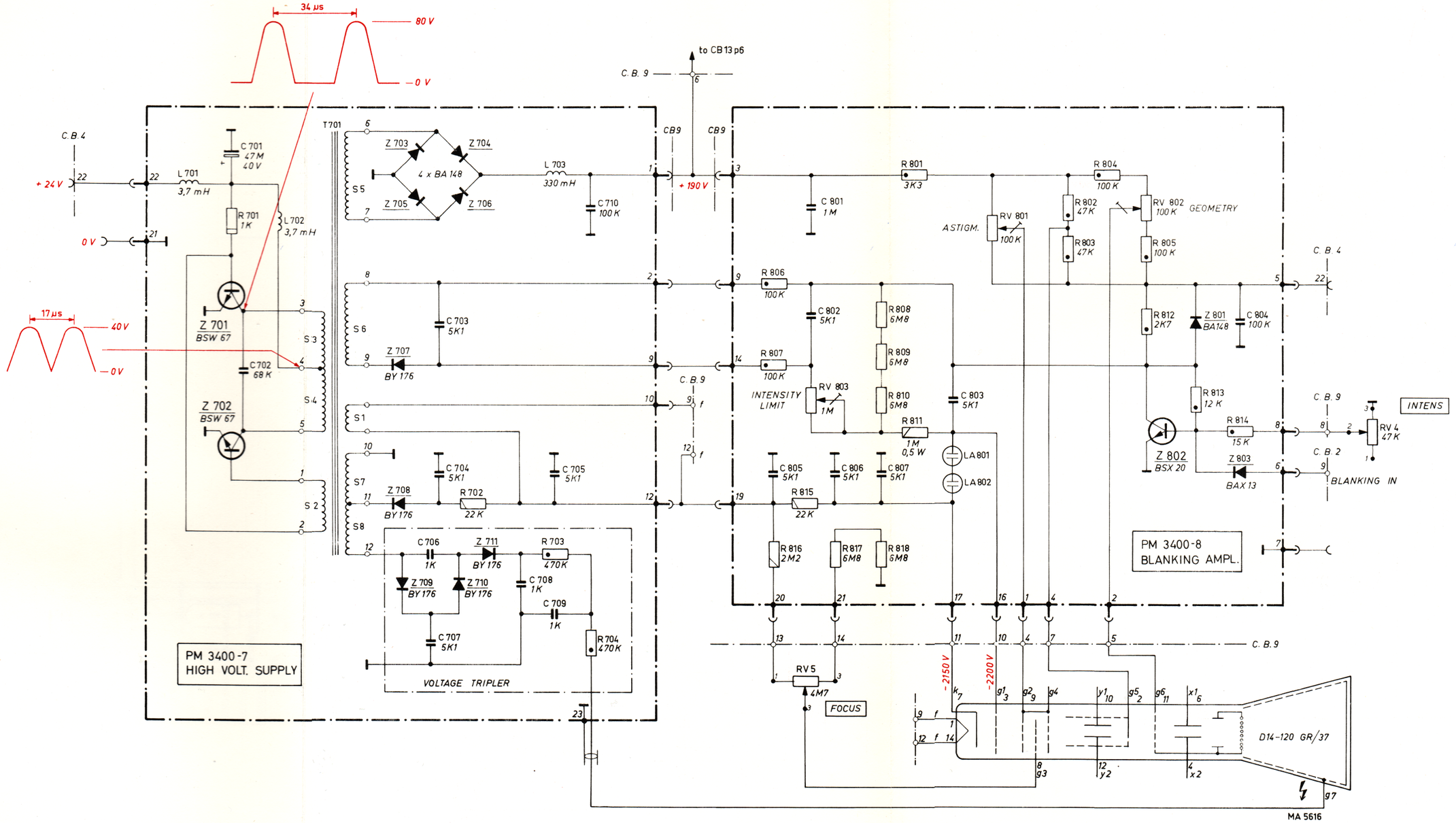

Fig. XVI-21 Diagram of display part