Colour Television

Chassis

TPN18.1E
EU

Service
Service
Service

Service Manual

Chassis name	Platform	Model name
TPN18.1E LA	NT72461	22PFS5303/12
		22PFS5403/12
		22PFT5303/05
		22PFT5303/12
		24PFS5303/12
		24PFS5703/12
		24PFT5303/05
		24PFT5303/12

Published by Amy/SC 1806 Quality Subject to modification 3122 785 20640
2018-Feb-09

2018 © TP Vision Netherlands B.V.
All rights reserved. Specifications are subject to change without notice. Trademarks are the property of Koninklijke Philips Electronics N.V. or their respective owners.
TP Vision Netherlands B.V. reserves the right to change products at any time without being obliged to adjust earlier supplies accordingly.
PHILIPS and the PHILIPS' Shield Emblem are used under license from Koninklijke Philips Electronics N.V.

1. Product Information..... 3
2. Precautions, Notes, and Abbreviation List.....5
3. Mechanical Instruction 11
Cable dressing (22/24" 5303 series).....11
Cable dressing (22" 5403 series).....12
Cable dressing (24" 5703 series).....13
Assembly/Panel Removal 14
4. Service Modes.....18
5. Software upgrading, Error Code and Panel Code..... 22
6. Trouble Shooting.....26
7. Electrical Diagram.....29
8. IC Data Sheet 32
9. Circuit Diagrams 37
9.1 715G8697 PSU.....37
9.2 715G7735 PSU.....38
9.3 715G7734 PSU 39
9.4 715G9368 SSB.....41
9.5 715G8576 IR/LED Panel.....57
9.6 715G8009 IR/LED Panel.....58
10. Styling Sheet.....59
5303 series 22/24".....59
5403 series 22".....60
5703 series 24".....61

2018 © TP Vision Netherlands B.V.
All rights reserved. Specifications are subject to change without notice. Trademarks are the property of Koninklijke Philips Electronics N.V. or their respective owners.
TP Vision Netherlands B.V. reserves the right to change products at any time without being obliged to adjust earlier supplies accordingly.
PHILIPS and the PHILIPS' Shield Emblem are used under license from Koninklijke Philips Electronics N.V.

1. Product Information

Product information is subject to change without notice.
For detailed product information, please visit www.philips.com/support

Display Input Resolution

For PHx series TV

Video formats

Resolution – Refresh rate

- 480i – 60 Hz
- 480p– 60 Hz
- 576i – 50 Hz
- 576p– 50 Hz
- 720p– 50 Hz, 60 Hz
- 1080i– 50 Hz, 60 Hz
- 1080p– 24 Hz, 25 Hz, 30 Hz

Computer formats

Resolutions (amongst others)

- 640 x 480p – 60Hz
- 800 x 600p – 60Hz
- 1024 x 768p – 60Hz
- 1280 x 768p – 60Hz
- 1360 x 768p – 60Hz

+

For PFx series TV

Video formats

Resolution – Refresh rate

- 480i – 60 Hz
- 480p– 60 Hz
- 576i – 50 Hz
- 576p– 50 Hz
- 720p– 50 Hz, 60 Hz
- 1080i– 50 Hz, 60 Hz
- 1080p– 24 Hz, 25 Hz, 30 Hz

Computer formats

Resolutions (amongst others)

- 640 x 480p – 60Hz
- 800 x 600p – 60Hz
- 1024 x 768p – 60Hz
- 1280 x 768p – 60Hz
- 1360 x 768p – 60Hz
- 1280 x 1024p – 60Hz
- 1920 x 1080p – 60Hz

Reception

For PxT series TV

- Aerial input : 75 ohm coaxial (IEC75)
- Tuner bands : Hyperband, S-Channel, UHF, VHF
- DVB : DVB-T2, DVB-C (cable) QAM
- Analogue video playback : SECAM, PAL
- Digital video playback : MPEG2 SD/HD (ISO/IEC 13818-2), MPEG4 SD/HD (ISO/IEC 14496-10), HEVC*
- Digital audio playback (ISO/IEC 13818-3)

* Only for DVB-T2

For PxS series TV

- Aerial input : 75 ohm coaxial (IEC75)
- Tuner bands : Hyperband, S-Channel, UHF, VHF
- DVB : DVB-T2, DVB-C (cable) QAM
- Analogue video playback : SECAM, PAL
- Digital video playback : MPEG2 SD/HD (ISO/IEC 13818-2), MPEG4 SD/HD (ISO/IEC 14496-10), HEVC*
- Digital audio playback (ISO/IEC 13818-3)
- Satellite aerial input : 75 ohm F-type
- Input frequency range : 950 to 2150MHz
- Input level range : 25 to 65 dBm
- DVB-S2 QPSK, symbol rate 2 to 45M symbols, SCPC and MCPC
- LNB : DiSEqC 1.0, 1 to 4 LNBs supported, Polarity selection 14/18V, Band selection 22kHz, Tone burst mode, LNB current 300mA max

* Only for DVB-T2, DVB-S2

Display Resolution

5303 series TV

Diagonal screen size

- 22PFx5303 : 55 cm / 22 inch
- 24PFx5303 : 60 cm / 24 inch

Display resolution

- PFx5303: 1920x1080

5403 series TV

Diagonal screen size

- 22PFx5403 : 55 cm / 22 inch

Display resolution

- PFx5403: 1920x1080

5703 series TV

Diagonal screen size

- 24PFx57x3 : 60 cm / 24 inch

Display resolution
- PFx57x3: 1920x1080

Sound

5303, 5403 series TV
- Output power (RMS) : 6W
- Dolby Audio
- DTS 2.0+ Digital out ™

5703 series TV
- Output power (RMS) : 16W
- Dolby Audio
- DTS 2.0+ Digital out ™

Multimedia

Supported USB file systems
- USB (FAT / FAT 32 / NTFS): only connect USB devices that consume 500 mA of power or less.

Playback formats
- Image Codec : JPEG, GIF, PNG, BMP
- Audio Codec: MP3, WAV, WMA (v2 up to v9.2), AC3, AAC, HE-AAC, DTS 2.0
- Video Codec: AVI, MKV, H.264/MPEG-4 AVC, MPEG1, MPEG2, MPEG4, WMV9/VC1, HEVC
- Subtitle: SRT, SMI, SSA, SUB, ASS, TXT

Connectivity

For xxPFS5303, 22PFS5403, 24PFS5703

TV Rear
- HDMI 1 ARC: HDMI Audio Return Channel
- HDMI 2
- DIGITAL AUDIO OUT: SPDIF
- VGA
- AUDIO IN (DVI/VGA): Stereo 3.5mm mini-jack
- SCART (RGB/CVBS): SCART adaptor
- TV ANTENNA: 75 ohm coaxial (IEC)
- Satellite

TV Side
- CI: Common Interface
- USB
- Headphones: Stereo 3.5mm mini-jack

For xxPFT5303, 22PFT5403, 24PFT5703

TV Rear
- HDMI 1 ARC: HDMI Audio Return Channel
- HDMI 2
- DIGITAL AUDIO OUT: SPDIF
- VGA
- AUDIO IN (DVI/VGA): Stereo 3.5mm mini-jack
- SCART (RGB/CVBS): SCART adaptor
- TV ANTENNA: 75 ohm coaxial (IEC)
- Network LAN - RJ45 (for Freeview HD)*

TV Side
- CI: Common Interface
- USB
- Headphones: Stereo 3.5mm mini-jack

* Network port is only for UK models

Power (5303/5703 Series)

- Mains power: AC 220-240V +/-10%
- Ambient temperature: 5℃ to 35℃

The power rating stated on the product typeplate is the power consumption for this product during normal household use (IEC 62087 Ed.2). The maximum power rating, stated between brackets, is used for electrical safety (IEC 60065 Ed.8.0).

Power (5403 Series)

- Mains power: AC 220-240V +/-10%
- Power cable: 12 volt cable
- Ambient temperature: 5℃ to 35℃

The power rating stated on the product typeplate is the power consumption for this product during normal household use (IEC 62087 Ed.2). The maximum power rating, stated between brackets, is used for electrical safety (IEC 60065 Ed.8.0).

2. Precautions, Notes, and Abbreviation List

2.1 Safety Instructions

Safety regulations require the following during a repair:

- Connect the set to the Mains/AC Power via an isolation transformer (> 800 VA).
- Replace safety components, indicated by the symbol ⚠, only by components identical to the original ones. Any other component substitution (other than original type) may increase risk of fire or electrical shock hazard.

Safety regulations require that after a repair, the set must be returned in its original condition. Pay in particular attention to the following points:

- Route the wire trees correctly and fix them with the mounted cable clamps.
- Check the insulation of the Mains/AC Power lead for external damage.
- Check the strain relief of the Mains/AC Power cord for proper function.
- Check the electrical DC resistance between the Mains/AC Power plug and the secondary side (only for sets that have a Mains/AC Power isolated power supply):
  1. Unplug the Mains/AC Power cord and connect a wire between the two pins of the Mains/AC Power plug.
  2. Set the Mains/AC Power switch to the “on” position (keep the Mains/AC Power cord unplugged!).
  3. Measure the resistance value between the pins of the Mains/AC Power plug and the metal shielding of the tuner or the aerial connection on the set. The reading should be between 4.5 MΩ and 12 MΩ.
  4. Switch “off” the set, and remove the wire between the two pins of the Mains/AC Power plug.
- Check the cabinet for defects, to prevent touching of any inner parts by the customer.

2.2 Warnings

- All ICs and many other semiconductors are susceptible to electrostatic discharges (ESD). Careless handling during repair can reduce life drastically. Make sure that, during repair, you are connected with the same potential as the mass of the set by a wristband with resistance. Keep components and tools also at this same potential.
- Be careful during measurements in the high voltage section.
- Never replace modules or other components while the unit is switched “on”.
- When you align the set, use plastic rather than metal tools. This will prevent any short circuits and the danger of a circuit becoming unstable.

2.3 Notes

2.3.1 General

- Measure the voltages and waveforms with regard to the chassis (= tuner) ground (⏚), or hot ground (⏚), depending on the tested area of circuitry. The voltages and waveforms shown in the diagrams are indicative. Measure them in the Service Default Mode with a colour bar signal and stereo sound (L: 3 kHz, R: 1 kHz unless stated otherwise) and picture carrier at 475.25 MHz for PAL, or 61.25 MHz for NTSC (channel 3).
- Where necessary, measure the waveforms and voltages with (⊓) and without (⊼) aerial signal. Measure the voltages in the power supply section both in normal operation (⏻) and in stand-by (⏻). These values are indicated by means of the appropriate symbols.

2.3.2 Schematic Notes

- All resistor values are in ohms, and the value multiplier is often used to indicate the decimal point location (e.g. 2K2 indicates 2.2 kΩ).
- Resistor values with no multiplier may be indicated with either an “E” or an “R” (e.g. 220E or 220R indicates 220 Ω).
- All capacitor values are given in micro-farads (μ = x10^{-6}), nano-farads (n = x10^{-9}), or pico-farads (p = x10^{-12}).
- Capacitor values may also use the value multiplier as the decimal point indication (e.g. 2p2 indicates 2.2 pF).
- An “asterisk” (*) indicates component usage varies. Refer to the diversity tables for the correct values.
- The correct component values are listed on the Philips Spare Parts Web Portal.

2.3.3 Spare parts

For the latest spare part overview, consult your Philips Spare Part web portal.

2.3.4 BGA (Ball Grid Array) ICs

Introduction

For more information on how to handle BGA devices, visit this URL: http://www.atyourservice-magazine.com. Select “Magazine”, then go to “Repair downloads”. Here you will find Information on how to deal with BGA-ICs.

BGA Temperature Profiles

For BGA-ICs, you must use the correct temperature-profile. Where applicable and available, this profile is added to the

IC Data Sheet information section in this manual.

2.3.5 Lead-free Soldering

Due to lead-free technology some rules have to be respected by the workshop during a repair:

- Use only lead-free soldering tin. If lead-free solder paste is required, please contact the manufacturer of your soldering equipment. In general, use of solder paste within workshops should be avoided because paste is not easy to store and to handle.
- Use only adequate solder tools applicable for lead-free soldering tin. The solder tool must be able:
  - To reach a solder-tip temperature of at least 400°C.
  - To stabilize the adjusted temperature at the solder-tip.
  - To exchange solder-tips for different applications.
- Adjust your solder tool so that a temperature of around 360°C - 380°C is reached and stabilized at the solder joint. Heating time of the solder-joint should not exceed ~ 4 sec. Avoid temperatures above 400°C, otherwise wear-out of tips will increase drastically and flux-fluid will be destroyed. To avoid wear-out of tips, switch “off” unused equipment or reduce heat.
- Mix of lead-free soldering tin/parts with leaded soldering tin/parts is possible but PHILIPS recommends strongly to avoid mixed regimes. If this cannot be avoided, carefully clear the solder-joint from old tin and re-solder with new tin.

2.3.6 Alternative BOM identification

It should be noted that on the European Service website, “Alternative BOM” is referred to as “Design variant”.

The third digit in the serial number (example: AG2B0335000001) indicates the number of the alternative B.O.M. (Bill Of Materials) that has been used for producing the specific TV set. In general, it is possible that the same TV model on the market is produced with e.g. two different types of displays, coming from two different suppliers. This will then result in sets which have the same CTN (Commercial Type Number; e.g. 28PW9515/12) but which have a different B.O.M. number.

By looking at the third digit of the serial number, one can identify which B.O.M. is used for the TV set he is working with. If the third digit of the serial number contains the number “1” (example: AG1B033500001), then the TV set has been manufactured according to B.O.M. number 1. If the third digit is a “2” (example: AG2B0335000001), then the set has been produced according to B.O.M. no. 2. This is important for ordering the correct spare parts!

For the third digit, the numbers 1...9 and the characters A...Z can be used, so in total: 9 plus 26= 35 different B.O.M.s can be indicated by the third digit of the serial number.

Identification: The bottom line of a type plate gives a 14-digit serial number. Digits 1 and 2 refer to the production centre (e.g. SN is Lysomice, RJ is Kobierzyce), digit 3 refers to the B.O.M. code, digit 4 refers to the Service version change code, digits 5 and 6 refer to the production year, and digits 7 and 8 refer to production week (in example below it is 2010 week 10 / 2010 week 17). The 6 last digits contain the serial number.

Figure 3-1 Serial number (example)

2.3.7 Board Level Repair (BLR) or Component Level Repair (CLR)

If a board is defective, consult your repair procedure to decide if the board has to be exchanged or if it should be repaired on component level.

If your repair procedure says the board should be exchanged completely, do not solder on the defective board. Otherwise, it cannot be returned to the O.E.M. supplier for back charging!

2.3.8 Practical Service Precautions

- **It makes sense to avoid exposure to electrical shock.** While some sources are expected to have a possible dangerous impact, others of quite high potential are of limited current and are sometimes held in less regard.

- **Always respect voltages.** While some may not be dangerous in themselves, they can cause unexpected reactions that are best avoided. Before reaching into a powered TV set, it is best to test the high voltage insulation. It is easy to do, and is a good service precaution.

2.4 Abbreviation List

0/6/12	SCART switch control signal on A/V board. 0 = loop through (AUX to TV),6 = play 16 : 9 format, 12 = play 4 : 3 format
DNR	Digital Noise Reduction: noise reduction feature of the set
AARA	Automatic Aspect Ratio Adaptation: algorithm that adapts aspect ratio to remove horizontal black bars; keeps the original aspect ratio
ACI	Automatic Channel Installation: algorithm that installs TV channels directly from a cable network by means of a predefined TXT page
ADC	Analogue to Digital Converter
AFC	Automatic Frequency Control: control signal used to tune to the correct frequency
AGC	Automatic Gain Control: algorithm that ontrols the video input of the feature box
AM	Amplitude Modulation
AP	Asia Pacific
AR	Aspect Ratio: 4 by 3 or 16 by 9
ASF	Auto Screen Fit: algorithm that adapts aspect ratio to remove horizontal black bars without discarding video information
ATSC	Advanced Television Systems Committee, the digital TV standard in the USA
ATV	See Auto TV
Auto TV	A hardware and software control system that measures picture content, and adapts image parameters in a dynamic way
AV	External Audio Video
AVC	Audio Video Controller
AVIP	Audio Video Input Processor
B/G	Monochrome TV system. Sound carrier distance is 5.5 MHz
BDS	Business Display Solutions (iTV)
BLR	Board-Level Repair
BTSC	Broadcast Television Standard Committee. Multiplex FM stereo sound system, originating from the USA and used e.g. in LATAM and AP-NTSC countries
B-TXT	Blue TeleteXT
C	Centre channel (audio)
CEC	Consumer Electronics Control bus: remote control bus on HDMI connections
CL	Constant Level: audio output to connect with an external amplifier
CLR	Component Level Repair
ComPair	Computer aided rePair
CP	Connected Planet / Copy Protection
CSM	Customer Service Mode
CTI	Color Transient Improvement: manipulates steepness of chroma transients
CVBS	Composite Video Blanking and Synchronization
DAC	Digital to Analogue Converter
DBE	Dynamic Bass Enhancement: extra low frequency amplification
DCM	Data Communication Module. Also referred to as System Card or Smartcard (for iTV).
DDC	See “E-DDC”
D/K	Monochrome TV system. Sound carrier distance is 6.5 MHz
DFI	Dynamic Frame Insertion
DFU	Directions For Use: owner's manual
DMR	Digital Media Reader: card reader
DMSD	Digital Multi Standard Decoding
DNM	Digital Natural Motion
DRAM	Dynamic RAM
DRM	Digital Rights Management
DSP	Digital Signal Processing
DST	Dealer Service Tool: special remote control designed for service technicians
DTCP	Digital Transmission Content Protection; A protocol for protecting digital audio/video content that is traversing a high speed serial bus, such as IEEE-1394
DVB-C	Digital Video Broadcast - Cable
DVB-T	Digital Video Broadcast - Terrestrial
DVD	Digital Versatile Disc
DVI(-d)	Digital Visual Interface (d= digital only)
E-DDC	Enhanced Display Data Channel (VESA standard for communication channel and display). Using E-DDC, the video source can read the EDID information form the display.

EDID	Extended Display Identification Data (VESA standard)
EEPROM	Electrically Erasable and Programmable Read Only Memory
EMI	Electro Magnetic Interference
EPG	Electronic Program Guide
EPLD	Erasable Programmable Logic Device
EU	Europe
EXT	EXTernal (source), entering the set by SCART or by cinches (jacks)
FDS	Full Dual Screen (same as FDW)
FDW	Full Dual Window (same as FDS)
FLASH	FLASH memory
FM	Field Memory or Frequency Modulation
FPGA	Field-Programmable Gate Array
FTV	Flat TeleVision
Gb/s	Giga bits per second
G-TXT	Green TeleteXT
H	H_sync to the module
HD	High Definition
HDD	Hard Disk Drive
HDCP	High-bandwidth Digital Content Protection: A “key” encoded into the HDMI/DVI signal that prevents video data piracy. If a source is HDCP coded and connected via HDMI/DVI without the proper HDCP decoding, the picture is put into a “snow vision” mode or changed to a low resolution. For normal content distribution the source and the display device must be enabled for HDCP “software key” decoding.
HDMI	High Definition Multimedia Interface
HP	HeadPhone
I	Monochrome TV system. Sound carrier distance is 6.0 MHz
I^2C	Inter IC bus
I^2D	Inter IC Data bus
I^2S	Inter IC Sound bus
IF	Intermediate Frequency
IR	Infra Red
IRQ	Interrupt Request
ITU-656	The ITU Radio communication Sector (ITU-R) is a standards body subcommittee of the International Telecommunication Union relating to radio communication. ITU-656 (a.k.a. SDI), is a digitized video format used for broadcast grade video. Uncompressed digital component or digital composite signals can be used. The SDI signal is self-synchronizing, uses 8 bit or 10 bit data words, and has a maximum data rate of 270 Mbit/s, with a minimum bandwidth of 135 MHz.
iTV	Institutional TeleVision; TV sets for hotels, hospitals etc.
LS	Last Status; The settings last chosen by the customer and read and stored in RAM or in the NVM. They are called at start-up of the set to configure it according to the customer's preferences
LATAM	Latin America
LCD	Liquid Crystal Display
LED	Light Emitting Diode
L/L'	Monochrome TV system. Sound carrier distance is 6.5 MHz. L' is Band I, L is all bands except for Band I
LPL	LG.Philips LCD (supplier)
LS	Loudspeaker
LVDS	Low Voltage Differential Signalling
Mbps	Mega bits per second
M/N	Monochrome TV system. Sound carrier distance is 4.5 MHz
MHEG	Part of a set of international standards related to the presentation of multimedia information, standardised by the Multimedia and Hypermedia Experts Group. It is commonly used as a language to describe interactive television services
MIPS	Microprocessor without Interlocked Pipeline-Stages; A RISC-based microprocessor
MOP	Matrix Output Processor
MOSFET	Metal Oxide Silicon Field Effect Transistor, switching device
MPEG	Motion Pictures Experts Group
MPIF	Multi Platform InterFace
MUTE	MUTE Line
MTV	Mainstream TV: TV-mode with Consumer TV features enabled (iTV)
NC	Not Connected
NICAM	Near Instantaneous Compounded Audio Multiplexing. This is a digital sound system, mainly used in Europe.
NTC	Negative Temperature Coefficient, non-linear resistor

NTSC	National Television Standard Committee. Color system mainly used in North America and Japan. Color carrier NTSC M/N= 3.579545 MHz, NTSC 4.43= 4.433619 MHz (this is a VCR norm, it is not transmitted off-air)
NVM	Non-Volatile Memory: IC containing TV related data such as alignments
O/C	Open Circuit
OSD	On Screen Display
OAD	Over the Air Download. Method of software upgrade via RF transmission. Upgrade software is broadcasted in TS with TV channels.
OTC	On screen display Teletext and Control; also called Artistic (SAA5800)
P50	Project 50: communication protocol between TV and peripherals
PAL	Phase Alternating Line. Color system mainly used in West Europe (colour carrier = 4.433619 MHz) and South America (colour carrier PAL M = 3.575612 MHz and PAL N = 3.582056 MHz)
PCB	Printed Circuit Board (same as “PWB”)
PCM	Pulse Code Modulation
PDP	Plasma Display Panel
PFC	Power Factor Corrector (or Pre-conditioner)
PIP	Picture In Picture
PLL	Phase Locked Loop. Used for e.g. FST tuning systems. The customer can give directly the desired frequency
POD	Point Of Deployment: a removable CAM module, implementing the CA system for a host (e.g. a TV-set)
POR	Power On Reset, signal to reset the uP
PSDL	Power Supply for Direct view LED backlight with 2D-dimming
PSL	Power Supply with integrated LED drivers
PSLS	Power Supply with integrated LED drivers with added Scanning functionality
PTC	Positive Temperature Coefficient, non-linear resistor
PWB	Printed Wiring Board (same as “PCB”)
PWM	Pulse Width Modulation
QRC	Quasi Resonant Converter
QTNR	Quality Temporal Noise Reduction
QVCP	Quality Video Composition Processor
RAM	Random Access Memory
RGB	Red, Green, and Blue. The primary color signals for TV. By mixing levels of R, G, and B, all colors (Y/C) are reproduced.
RC	Remote Control
RC5 / RC6	Signal protocol from the remote control receiver
RESET	RESET signal
ROM	Read Only Memory
RSDS	Reduced Swing Differential Signalling data interface
R-TXT	Red TeleteXT
SAM	Service Alignment Mode
S/C	Short Circuit
SCART	Syndicat des Constructeurs d'Appareils Radiorécepteurs et Téléviseurs
SCL	Serial Clock I^2C
SCL-F	CLock Signal on Fast I^2C bus
SD	Standard Definition
SDA	Serial Data I^2C
SDA-F	DAta Signal on Fast I^2C bus
SDI	Serial Digital Interface, see “ITU-656”
SDRAM	Synchronous DRAM
SECAM	SEequence Couleur Avec Mémoire. Colour system mainly used in France and East Europe. Colour carriers = 4.406250 MHz and 4.250000 MHz
SIF	Sound Intermediate Frequency
SMPS	Switched Mode Power Supply
SoC	System on Chip
SOG	Sync On Green
SOPS	Self Oscillating Power Supply
SPI	Serial Peripheral Interface bus; a 4-wire synchronous serial data link standard
S/PDIF	Sony Philips Digital InterFace
SRAM	Static RAM
SRP	Service Reference Protocol
SSB	Small Signal Board
SSC	Spread Spectrum Clocking, used to reduce the effects of EMI
STB	Set Top Box
STBY	STand-BY
SVGA	800 × 600 (4:3)
SVHS	Super Video Home System
SW	Software
SWAN	Spatial temporal Weighted Averaging Noise reduction
SXGA	1280 × 1024

TFT	Thin Film Transistor
THD	Total Harmonic Distortion
TMDS	Transmission Minimized Differential Signalling
TS	Transport Stream
TXT	TeleteXT
TXT-DW	Dual Window with TeleteXT
UI	User Interface
uP	Microprocessor
UXGA	1600 × 1200 (4:3)
V	V-sync to the module
VESA	Video Electronics Standards Association
VGA	640 × 480 (4:3)
VL	Variable Level out: processed audio output toward external amplifier
VSB	Vestigial Side Band; modulation method
WYSIWYR	What You See Is What You Record: record selection that follows main picture and sound
WXGA	1280 × 768 (15:9)
XTAL	Quartz crystal
XGA	1024 × 768 (4:3)
Y	Luminance signal
Y/C	Luminance (Y) and Chrominance (C) signal
YPbPr	Component video. Luminance and scaled color difference signals (B-Y and R-Y)
YUV	Component video

3. Mechanical Instructions

3.1 Cable Dressing

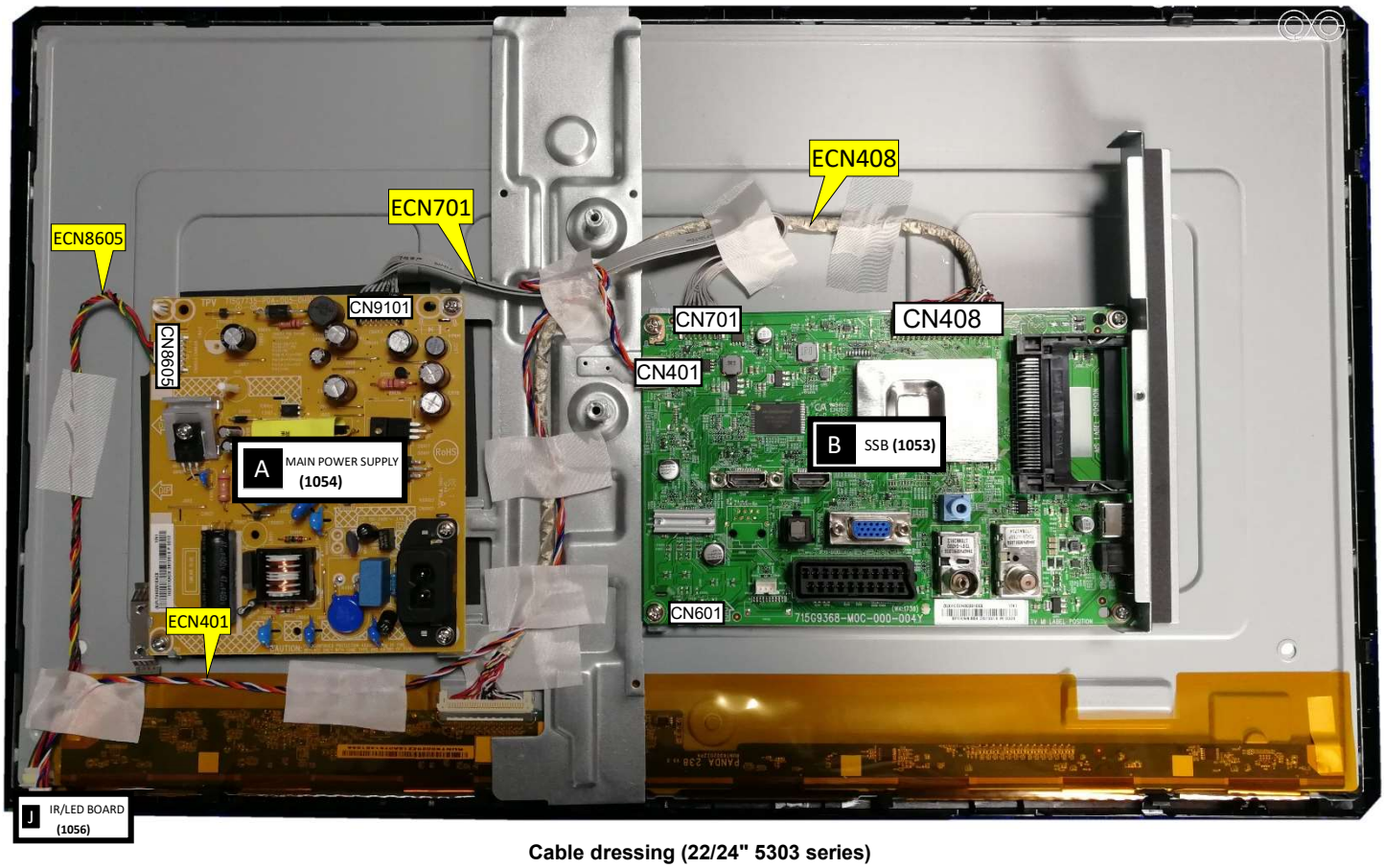

Cable dressing (22/24" 5303 series)

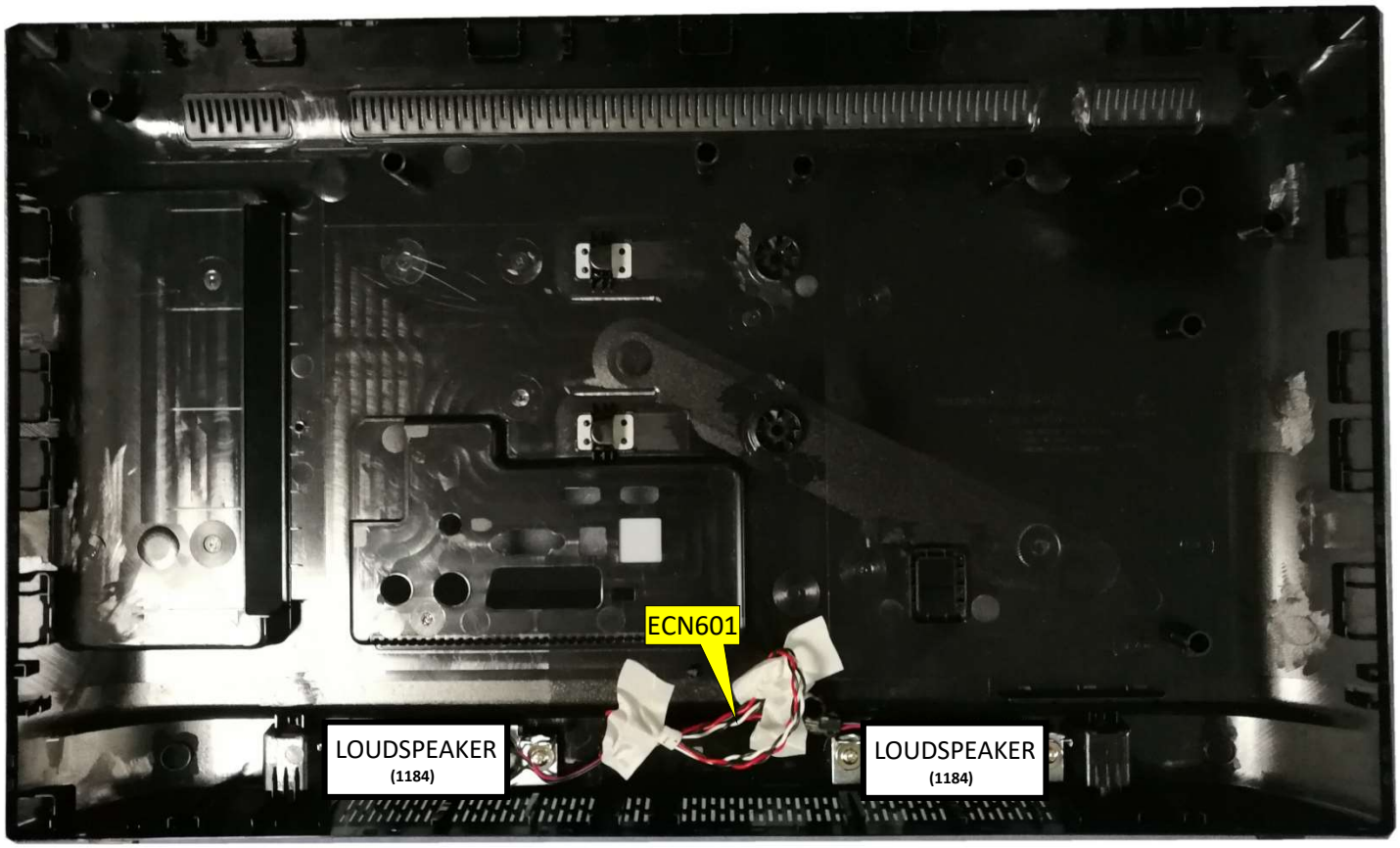

Back cover overview (22/24" 5303 series)

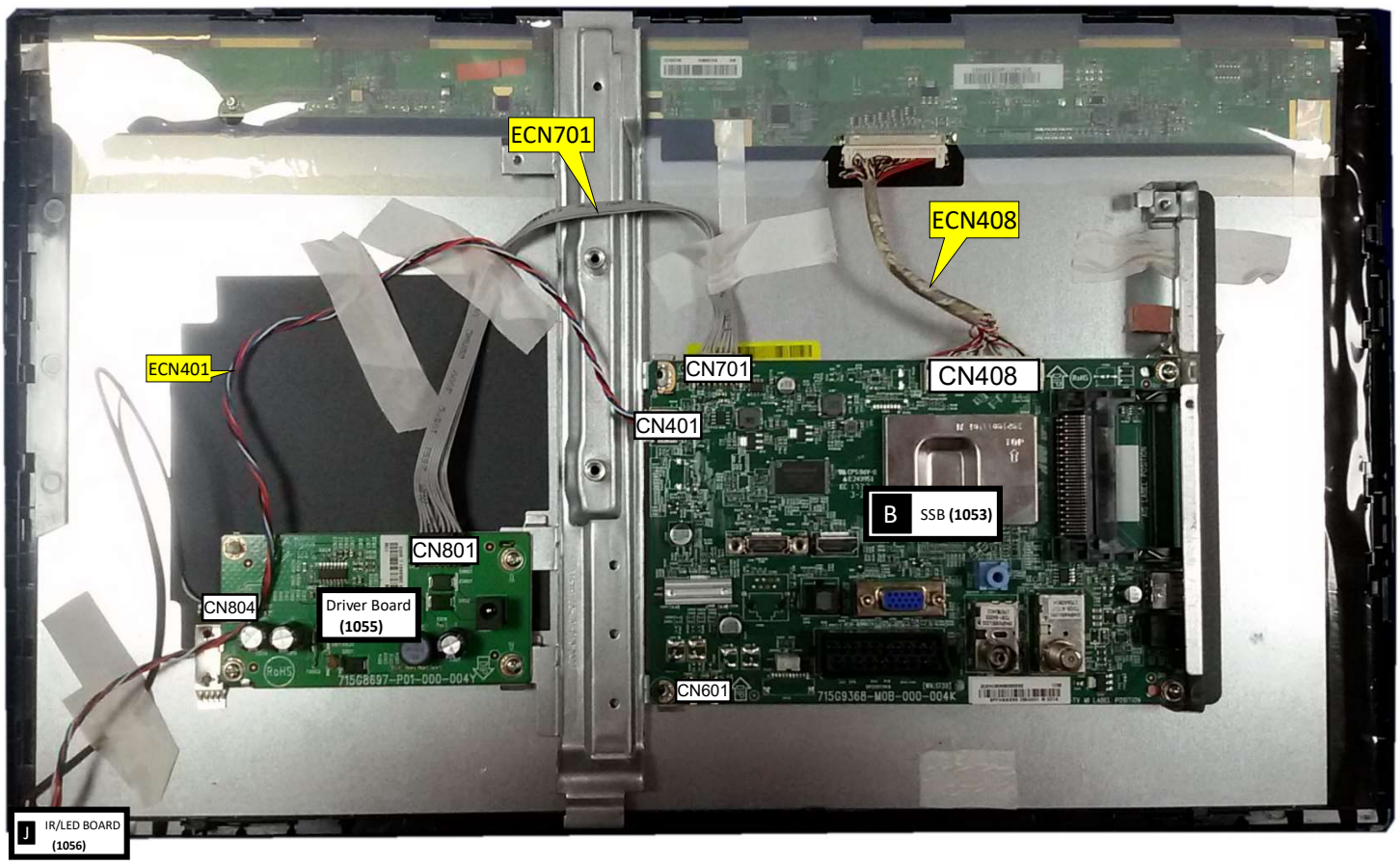

Cable dressing (22" 5403 series)

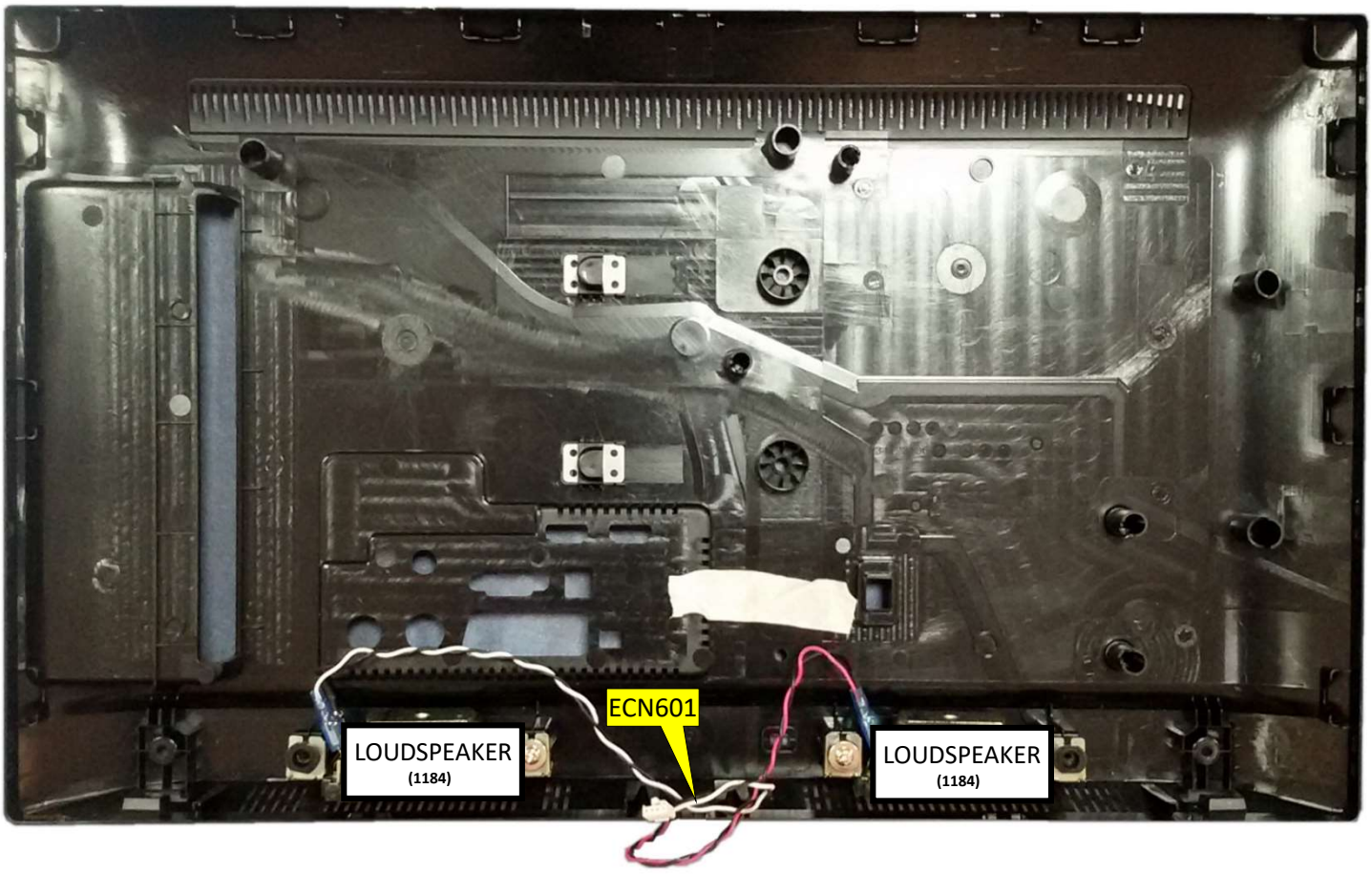

Back cover overview (22" 5403 series)

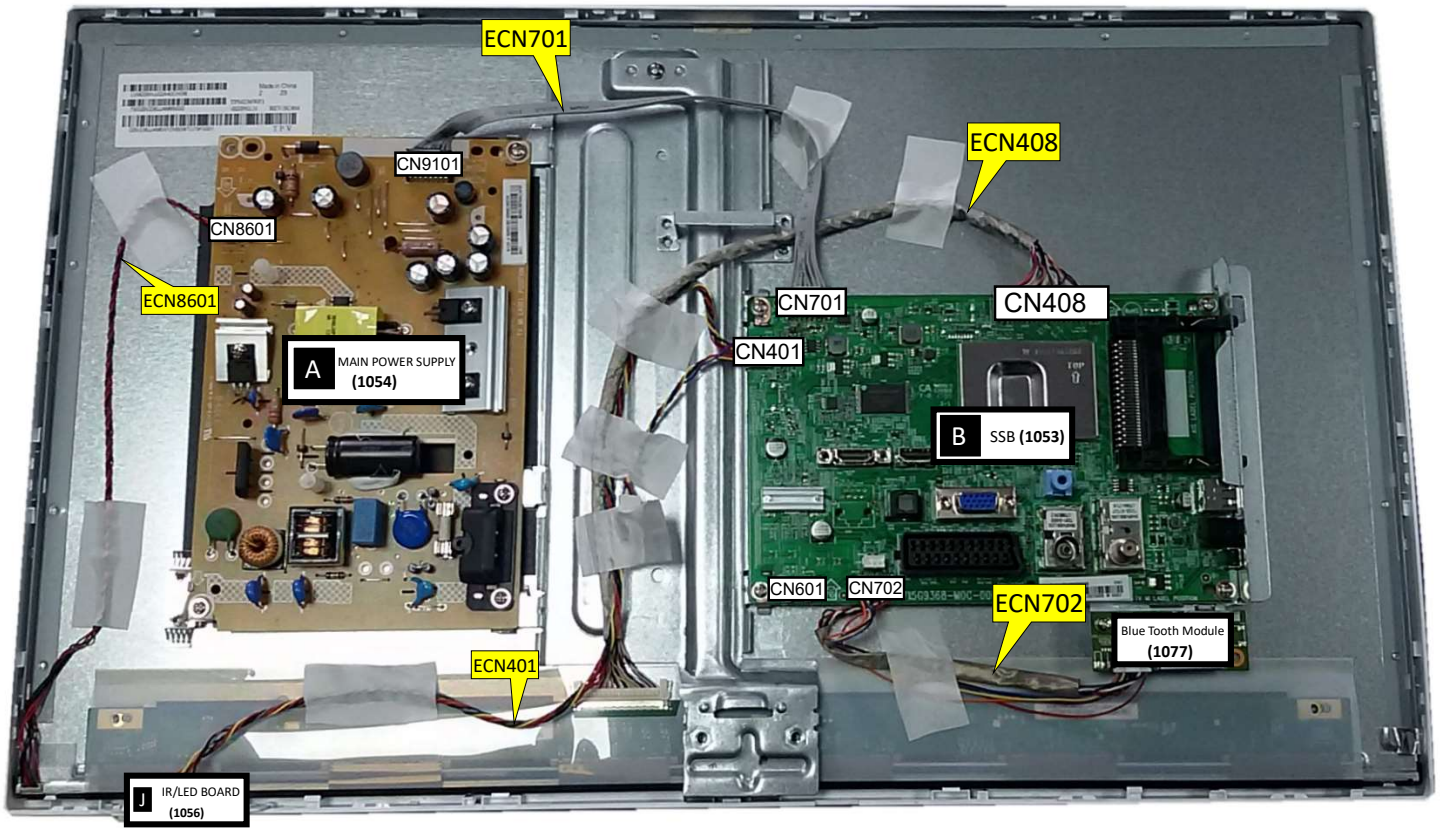

Cable dressing (24" 5703 series)

Sound Base (24" 5703 series)

3.2 Assembly/Panel Removal

3.2.1 Stand removal

Notes: Figures below can deviate slightly from the actual situation due to the different set executions.

1. Remove the fixation screws [1] that secure the stand.
2. Take the stand bracket out from the set.

(5303 series)

(5403 series)

3.2.2 Rear Cover

Warning: Disconnect the mains power cord before removing the rear cover.

1. Releasing the clips carefully at the indicated areas [2] that secure the back cover.
2. Unplug connector [3] carefully, as the speaker is catch on back cover.
3. Gently lift the rear cover from the TV. Make sure that wires and cables are not damaged while lifting the rear cover from the set.

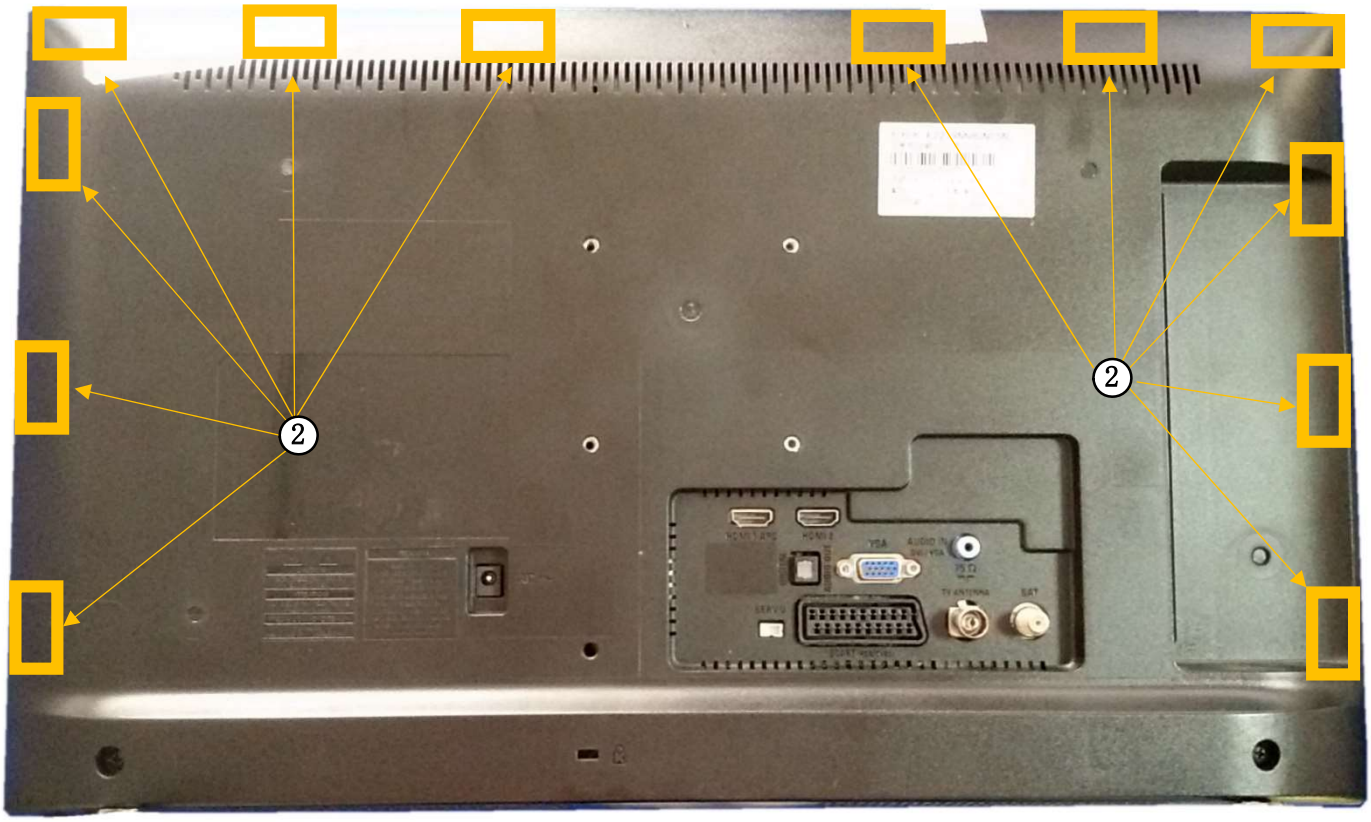

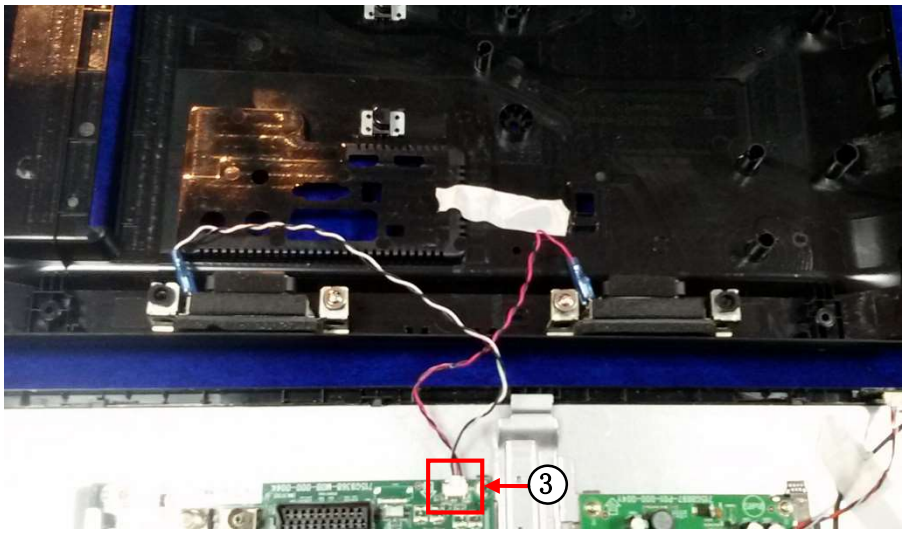

3.2.3 Small Signal Board (SSB)

Caution: it is mandatory to remount all different screws at their original position during re-assembly. Failure to do so may result in damaging the SSB.

1. Unplug all connectors [2] from the SSB.
2. Remove all the fixation screws [3] from the SSB.
3. The SSB can now be shifted from side connector cover, then lifted and taken out of the I/O bracket.

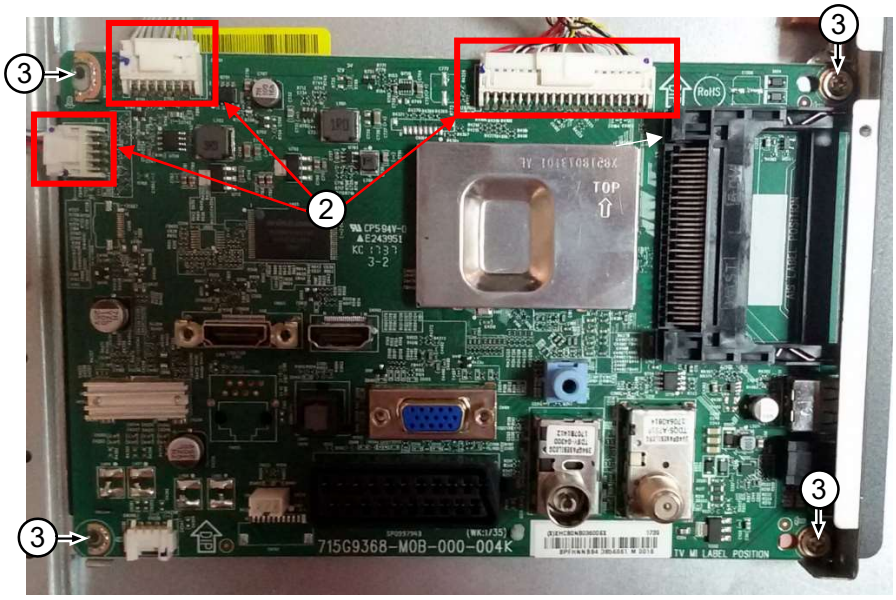

3.2.4 Power Supply Unit (PSU)

Caution: it is mandatory to remount all different screws at their original position during re-assembly. Failure to do so may result in damaging the PSU.

1. Gently unplug all connectors from the PSU.
2. Remove all fixation screws from the PSU.
3. The PSU can be taken out of the set now.

3.2.5 IR board Control Unit

1. Unplug the connector [2] from the IR board.
2. Press the snap that marked by blue box below backward then take out the IR board.

When defective, replace the whole unit.

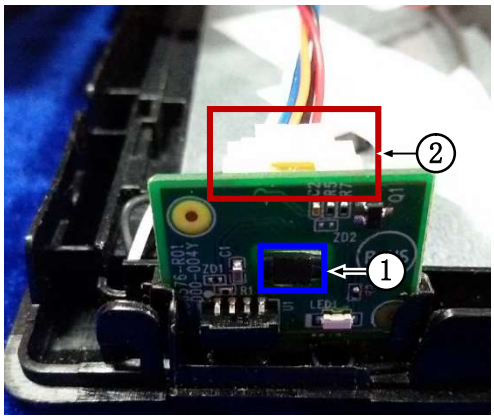

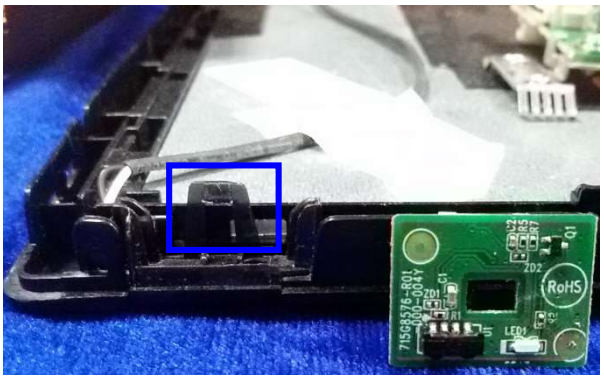

3.2.6 Speakers

1. Gently release the tapes that secure the speaker cables.
2. Unplug the speaker connector from the SSB.
3. Take the speakers out.

When defective, replace the both units.

3.2.7 LCD Panel

1. Remove the SSB as described earlier.
2. Remove the PSU as described earlier.
3. Remove the stand bracket as described earlier.
4. Remove the IR/LED as described earlier.
5. Remove the fixations screws that fix the metal clamps to the front bezel. Take out those clamps.
6. Remove all other metal parts not belonging to the panel.
7. Lift the LCD Panel from the bezel.

When defective, replace the whole unit.

4. Service Modes

4.1 Service Modes

The Service Mode feature is split into following parts:

Service Alignment Mode (SAM).

Factory Mode.

Customer Service Mode (CSM).

SAM and the Factory mode offer features, which can be used by the Service engineer to repair/align a TV set. Some features are:

Make alignments (e.g. White Tone), reset the error buffer(SAM and Factory Mode).

Display information ("SAM" indication in upper right corner of screen, error buffer, software version, operating hours,options and option codes, sub menus).

The CSM is a Service Mode that can be enabled by the consumer. The CSM displays diagnosis information, which the customer can forward to the dealer or call centre. In CSM mode, "CSM", is displayed in the top right corner of the screen. The information provided in CSM and the purpose of CSM is to:

Increase the home repair hit rate.

Decrease the number of nuisance calls.

Solved customers' problem without home visit.

Note: For the new model range, a new remote control (RC) is used with some renamed buttons. This has an impact on the activation of the Service modes. For instance the old "MENU" button is now called "HOME" (or is indicated by a "house" icon).

4.2 Service Alignment Mode (SAM)

Purpose

To modify the NVM.

To display/clear the error code buffer.

To perform alignments.

Specifications

Operation hours counter (maximum five digits displayed).

Software version, error codes, and option settings display.

Error buffer clearing.

Option settings.

Software alignments (White Tone).

NVM Editor.

Set screen mode to full screen (all content is visible).

How to Activate SAM

To activate SAM, use one of the following methods:

Press the following key sequence on the remote control transmitter: **"062596"**, directly followed by the **"INFO/OK"** button. Do not allow the display to time out between entries while keying the sequence.

Or via ComPair.

After entering SAM, the following items are displayed,

with "SAM" in the upper right corner of the screen to indicate that the television is in Service Alignment Mode.

How to Navigate

In the SAM menu, select menu items with the UP/DOWN keys on the remote control transmitter. The selected item will be indicated. When not all menu items fit on the screen, use the **UP/DOWN keys** to display the next/previous menu items.

With the "LEFT/RIGHT" keys, it is possible to:

(De) activate the selected menu item.

(De) activate the selected sub menu.

Change the value of the selected menu item.

When you press the MENU button once while in top level SAM, the set will switch to the normal user menu (with the SAM mode still active in the background).

How to Store SAM Settings

To store the settings changed in SAM mode (except the RGB Align settings), leave the top level SAM menu by using the POWER button on the remote control transmitter or the television set. The mentioned exceptions must be stored separately via the STORE button.

How to Exit SAM

Use one of the following methods:
Switch the set to STANDBY by pressing the mains button on the remote control transmitter or the television set.
Via a standard RC-transmitter, key in “00” sequence.
Note: When the TV is switched “off” by a power interrupt while in SAM, the TV will show up in “normal operation mode” as soon as the power is supplied again. The error buffer will not be cleared.

SAM mode overview

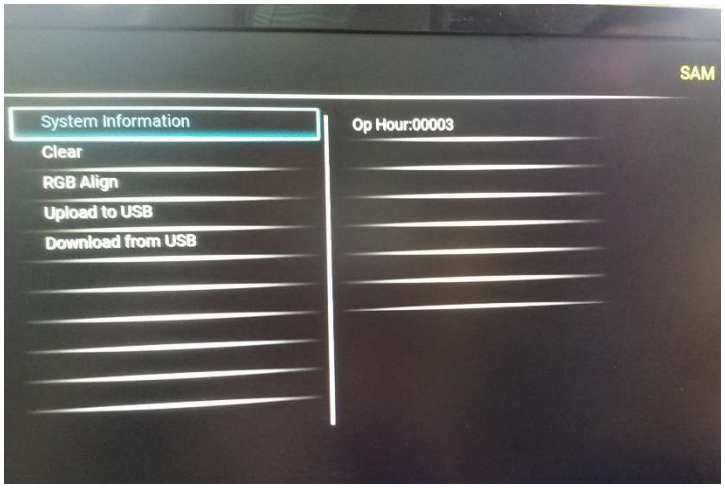

4.3 Factory mode:

Purpose

To perform extended alignments.

Specifications

Displaying and or changing Panel ID information.
Displaying and or changing Tuner ID information.
Error buffer clearing.
Various software alignment settings.
Testpattern displaying.
Public Broadcasting Service password Reset.
etc.

How to Activate the Factory mode

To activate the Factory mode, use the following method:
Press the following key sequence on the remote control transmitter: from the **“menu/home”** press **“1999”**, directly followed by the **“Back/Return”** button.
Do not allow the display to time out between entries while keying the sequence.
After entering the Factory mode, we can see many items displayed, use the **UP/DOWN** keys to display the next/previous menu items

Factory mode overview

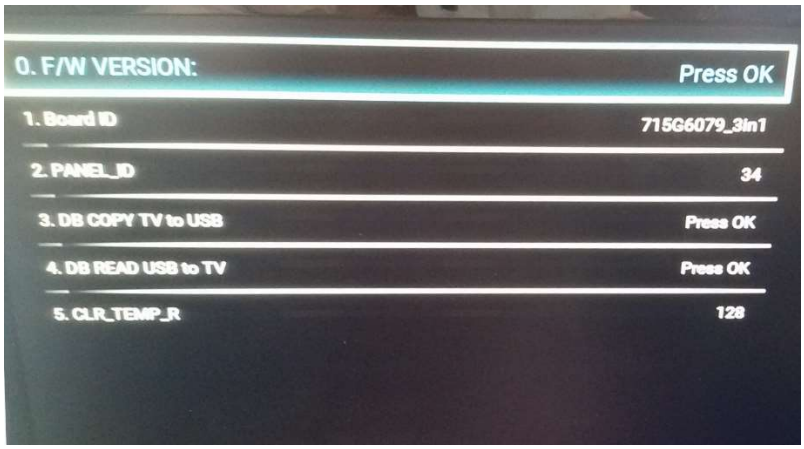

How to Exit the Factory mode

Use one of the following methods:

Select EXIT_FACTORY from the menu and press the “OK” button.

Note: When the TV is switched “off” by a power interrupt, or normal switch to “stand-by” while in the factory mode, the TV will show up in “normal operation mode” as soon as the power is supplied again. The error buffer will not be cleared.

4.4 Customer Service Mode (CSM)

Purpose

The Customer Service Mode shows error codes and information on the TVs operation settings.The call centre can instruct the customer (by telephone) to enter CSM in order to identify the status of the set.This helps the call centre to diagnose problems and failures in the TV set before making a service call.

The CSM is a read-only mode; therefore, modifications are not possible in this mode.

Specifications

Ignore “Service unfriendly modes”.

Line number for every

line (to make CSM language independent).

Set the screen mode to full

screen (all contents on screen is visible).

After leaving the Customer Service Mode, the original settings are restored.

Possibility to use “CH+” or “CH-” for channel surfing, or enter the specific channel number on the RC.

How to Activate CSM

To activate CSM, press the following key sequence on a standard remote control transmitter: **“123654”** (do not allow the display to time out between entries while keying the sequence). After entering the Customer Service Mode, the following items are displayed. use the **Right/Left** keys to display the next/previous menu items

Note: Activation of the CSM is only possible if there is no (user) menu on the screen!

CSM Overview

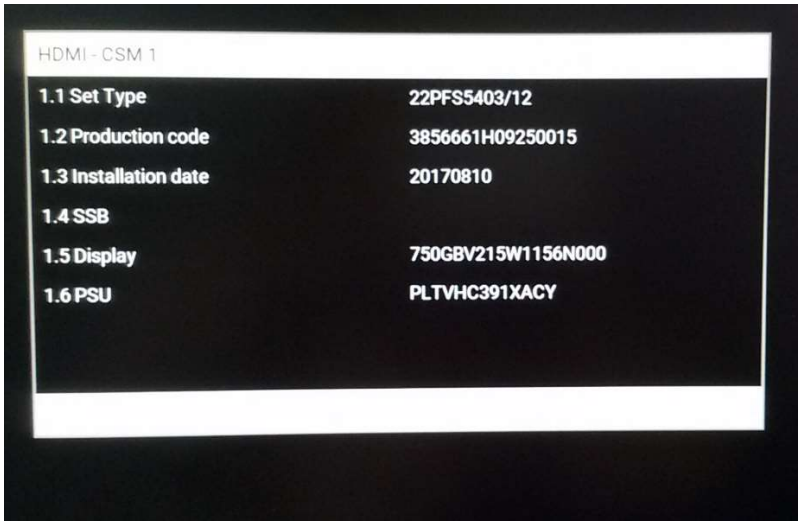

How to Navigate

By means of the “CURSOR-DOWN/UP” knob (or the scroll wheel) on the RC-transmitter, can be navigated through the menus.

How to Exit CSM

To exit CSM, use one of the following methods.

Press the MENU/HOME button on the remote control transmitter.

Press the POWER button on the remote control transmitter.

Press the POWER button on the television set.

5. Software Upgrading, Error code and Panel Code

5.1 Software Upgrading

5.1.1. The following update is for .pkg file.

1. Rename the file to “upgrade_loader.pkg”.
2. Prepare a USB memory (File format: FLAT, Size: 1G~8G).
3. Copy the software to USB flash disk (root directory).
4. Switch off the TV and Insert the USB memory stick that contains the software update files in one of the TV’s USB 2.0 port.
5. Switch on the TV. The TV will detect the USB memory stick automatically. Then a window jumps out as below:

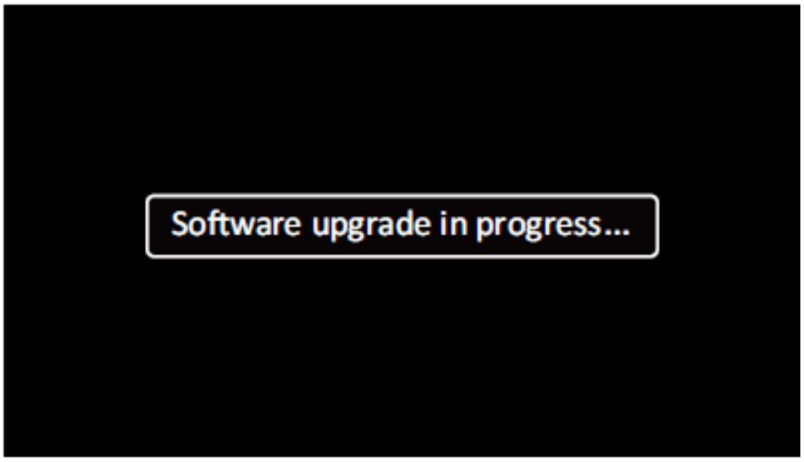

6. When the TV software is updated, the TV will turn on again automatically. Remove your USB flash drive.
7. We can enter in CSM to check the current software version.

5.1.2. The following update is for .upg file.

Step 1: Ready for F/W Upgrade

1. Rename the file to “Autorun.upg”.
2. Prepare a USB memory (File format: FLAT, Size: 1G~8G).
3. Copy the software to USB flash disk (root directory).

Note the version of this F/W before you change the software file name.

Step 2: F/W Upgrade

1. Plug the USB memory on the TV’s USB 2.0 port.
2. AC on (Power plug).
3. TV will show message as below image, Press [Start] to detect the software automatically

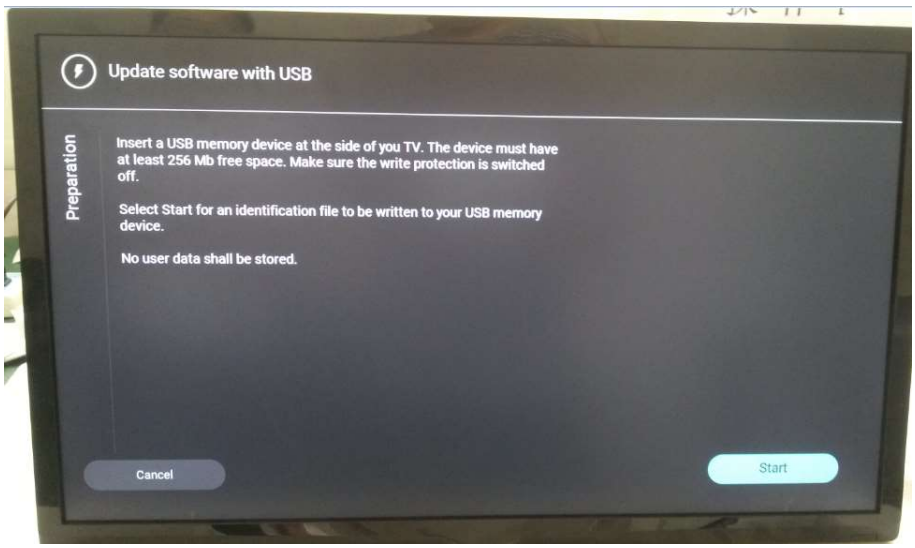

4. Press [Start] to start software upgrade

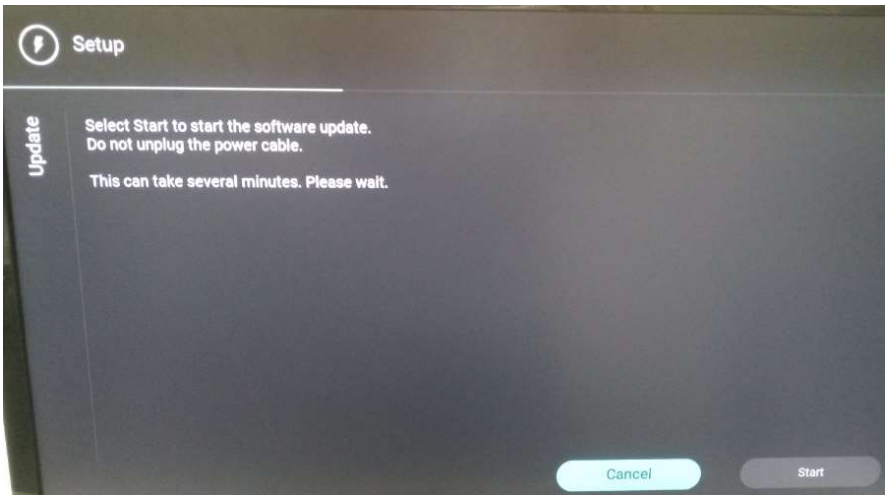

5. Upgrade in progress.
6. After software upgrade complete, select [Restart] to reboot TV.

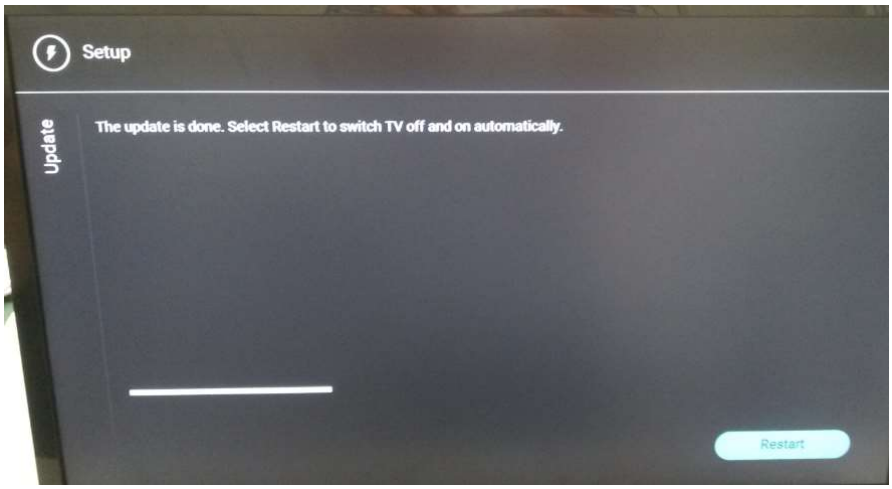

Step 3: Check the SW version

1. After burning software, TV will restart.
2. Press “123654”, enter Customer Service Mode to check if the software version is correct.

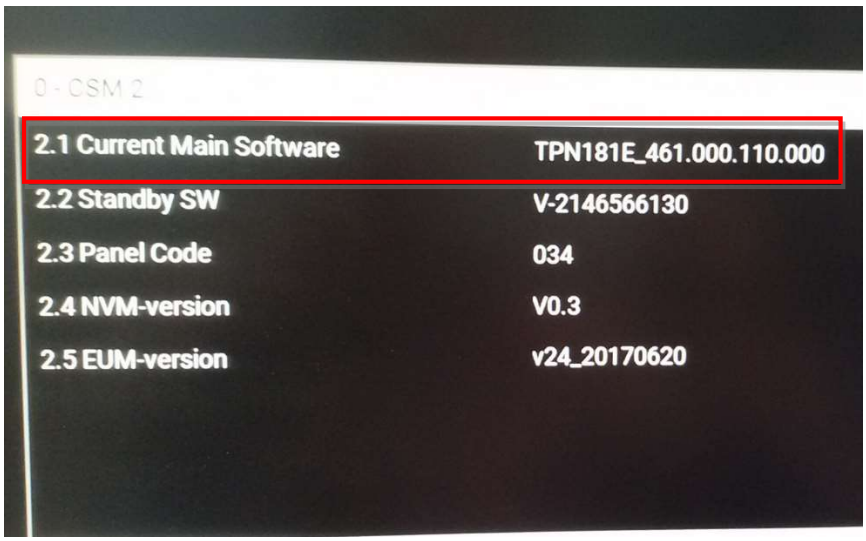

Caution: Please make sure that software upgrade is finished before unplug the USB and AC power!

5.2 Error Code

5.2.1 Introduction

Error codes are required to indicate failures in the TV set. In principle a unique error code is available for every:

• Activated (SW) protection.

• Failing I2C device.

• General I2C error.

The last five errors, stored in the NVM, are shown in the Service menu's. This is called the error buffer.

The error code buffer contains all errors detected since the last time the buffer was erased. The buffer is written from left to right. When an error occurs that is not yet in the error code buffer, it is displayed at the left side and all other errors shift one position to the right.

An error will be added to the buffer if this error differs from any error in the buffer. The last found error is displayed on the left.

An error with a designated error code never leads to a deadlock situation. It must always be diagnosable (e.g. error buffer via OSD or blinking LED).

In case a failure identified by an error code automatically results in other error codes (cause and effect), only the error code of the MAIN failure is displayed.

5.2.2 How to Read the Error Buffer

You can read the error buffer in below ways:

• On screen via the SAM/CSM (if you have a picture).

Example:

– **ERROR: 000 000 000 000 000**: No errors detected

– **ERROR: 013 000 000 000 000**: Error code 13 is the last and only detected error

– **ERROR: 034 013 000 000 000**: Error code 13 was detected first and error code 34 is the last detected (newest) error

• Via the blinking LED procedure (when you have no picture).

5.2.3 Error codes overview

In this chassis only "layer 2" error codes are available and point to problems on the SSB. They are triggered by LED blinking when CSM is activated. Only the following layer 2 errors are defined:

Description	LAYER 1 error	LAYER 2 error	Monitored	Medium	Error/ Prot.	I²C address	EB: in error buffer BL: Blinking LED	Device	Defective board
I²C BUSSES									
I²C 0 (SSB bus)	2	13	SOC	I²CM0	E		BL/EB	SSB	SSB
I²C MCU (BE bus)	2	14	SOC	I²CMCU	E		BL/EB	SSB	SSB
I²C 2 (FE bus)	2	15	SOC	I²CM2	E		BL/EB	SSB	SSB
I²C 1 (SFR bus)	2	18	SOC	I²CM1	E		BL/EB	SSB	SSB
SOC doesn't boot (HW cause)	2	15	St-by µP		P	D4	BL	MT5593	SSB
Supply related:									
12V	3	16	St-by µP	I/O	P		BL		Supply
Display supply (POK)	3	17	SOC	I/O	E		EB		Supply
SSB									
I2C switch	2	24	SOC	I²CMCU	E	E0	EB	PCA9540	SSB
Channel dec	2	27	SOC	I²CM2	E	D8-DC	EB	Silab Si216x	SSB
Boston (HDMI2.2)	2	29	SOC	I²CM0	E	64	EB	SIL 9777	SSB
Lnb controler	2	31	SOC	I²CM2	E	10	EB	LNBH 25	SSB

Kleernet (Wireless Audio)	2	32	SOC	I²CM1	E		EB		SSB
DTV Tuner	2	34	SOC	I²CM2	E	C0	EB	Silab Si2157 (H/T models) Sony Helene (K/S models)	SSB
Tuner DVB-S2	2	36	SOC	I²CM2	E	C6	EB	STV 6111	SSB
Class-D	2	37	SOC	I²CM3	E	36	EB	TAS 5731 PHP	SSB
FPGA PQ	2	38	SOC	I²CMCU	E	84?	EB	Durango	SSB
2nd Audio amplifier	2	39	SOC	I²CM3?	E	?	EB	?	SSB
T° sensor SSB/set	2	42	SOC	I²CM1	E	98	EB	LM 75	T°sensor
Light sensor	6	43	SOC	I²CM3	E	72	EB	TSL2571	SET
SOC doesn't boot (SW cause)	2	53	St-by µP		P	D4	BL	MT5593	SSB
NT72324	2	61	SOC	I²CM2	E	34	EB	NT72324	SSB
NT72323	2	62	SOC	I²CM2	E	A4	EB	NT72323	SSB
Splash error	2	65	SOC	-	E	-	EB	NT314, MT 5593,	SSB

5.2.4 How to Clear the Error Buffer

The error code buffer is cleared in the following cases:

• By using the CLEAR command in the SAM menu

• By using the CLEAR command in the Factory mode:

• By using the following key sequence on the remote control transmitter: "**062599**" directly followed by the **OK** button.

• If the contents of the error buffer have not changed for 50 hours, the error buffer resets automatically.

Note: If you exit SAM by disconnecting the mains from the television set, the error buffer is not reset.

5.3 Panel Code

Press the following key sequence on a standard RC transmitter: "062598" directly followed by MENU and "xxx", where "xxx" is a 3 digit decimal value of the panel type: see column "Display Code" in below tab. After resetting the Display Code, restart the set immediately.

CTN_ALT BOM#	Panel Type	Display Code
22PFS5303/12	TPM215WF1-WU3101.K 485BE	034
22PFS5403/12	TPM215WF1-WU3101.K 485BE	034
22PFT5303/05	TPM215WF1-WU3101.K 485BE	034
22PFT5303/12	TPM215WF1-WU3101.K 485BE	034
24PFS5303/12	TPM238WF1-LF1L0.Q S1F	035
24PFS5703/12	TPM236WF1-HJJP02.N SC4M	036
24PFT5303/05	TPM238WF1-LF1L0.Q S1F	035
24PFT5303/12	TPM238WF1-LF1L0.Q S1F	035

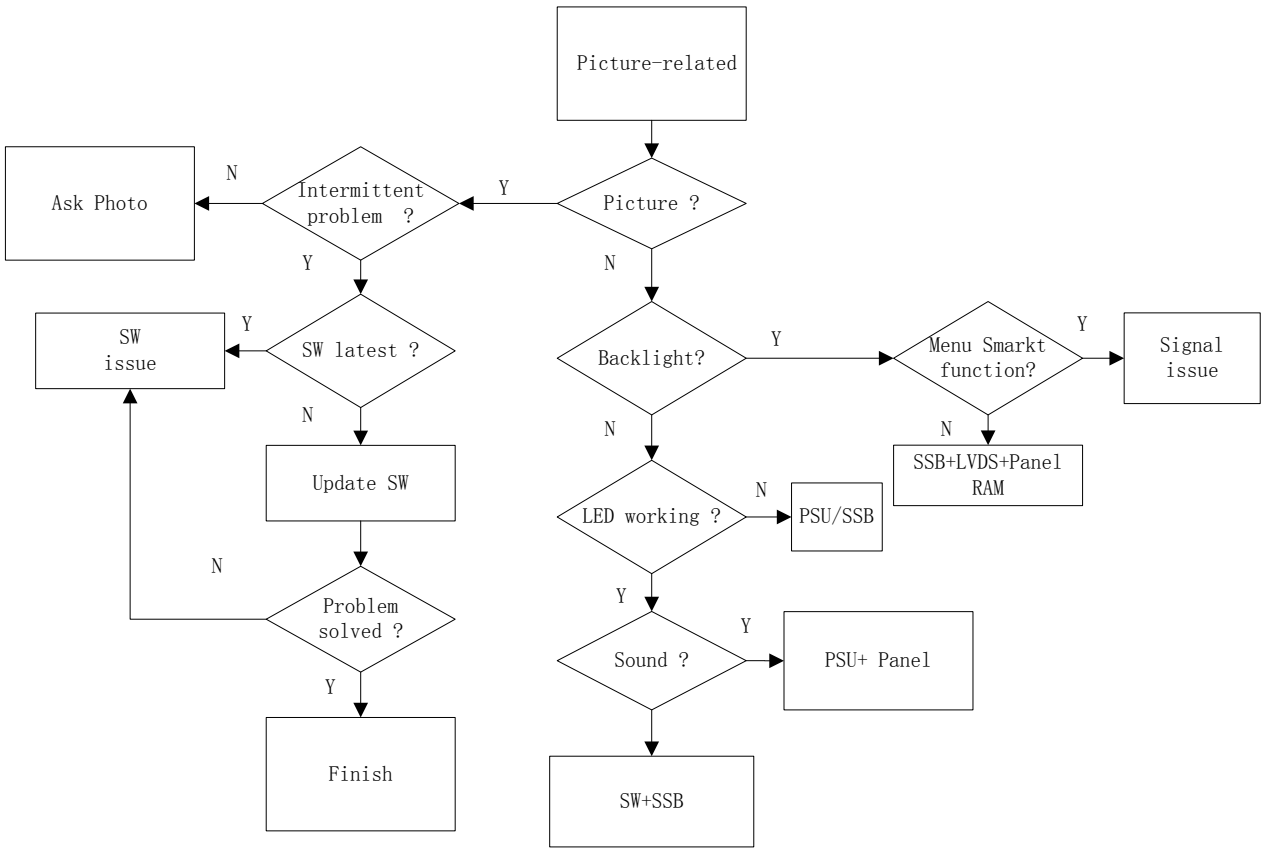
Picture-related
Picture ?
Y
Intermittent problem ?
N
Ask Photo
Y
SW latest ?
Y
SW issue
N
Update SW
Problem solved ?
N
Y
Finish
N
Backlight?
Y
Menu Smarkt function?
Y
Signal issue
N
SSB+LVDS+Panel RAM
N
LED working ?
N
PSU/SSB
Y
Sound ?
Y
PSU+ Panel
SW+SSB

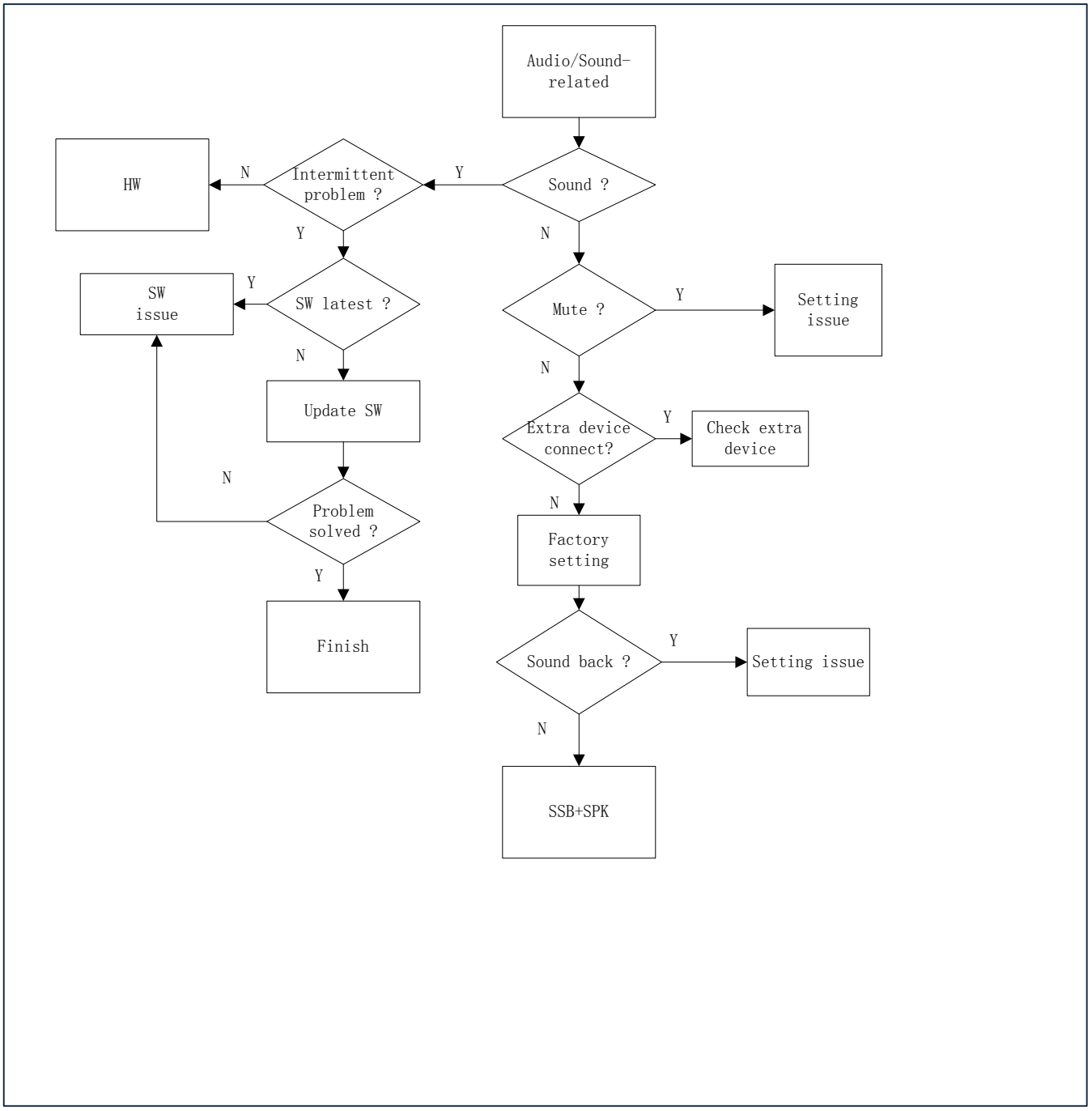
Audio/Sound-related
Sound ?
Y
Intermittent problem ?
N
HW
Y
SW latest ?
Y
SW issue
N
Update SW
Problem solved ?
N
Y
Finish
N
Mute ?
Y
Setting issue
N
Extra device connect?
Y
Check extra device
N
Factory setting
Sound back ?
Y
Setting issue
N
SSB+SPK

Trouble shooting system

TPV VISION INNOVATOR

2016/12/11

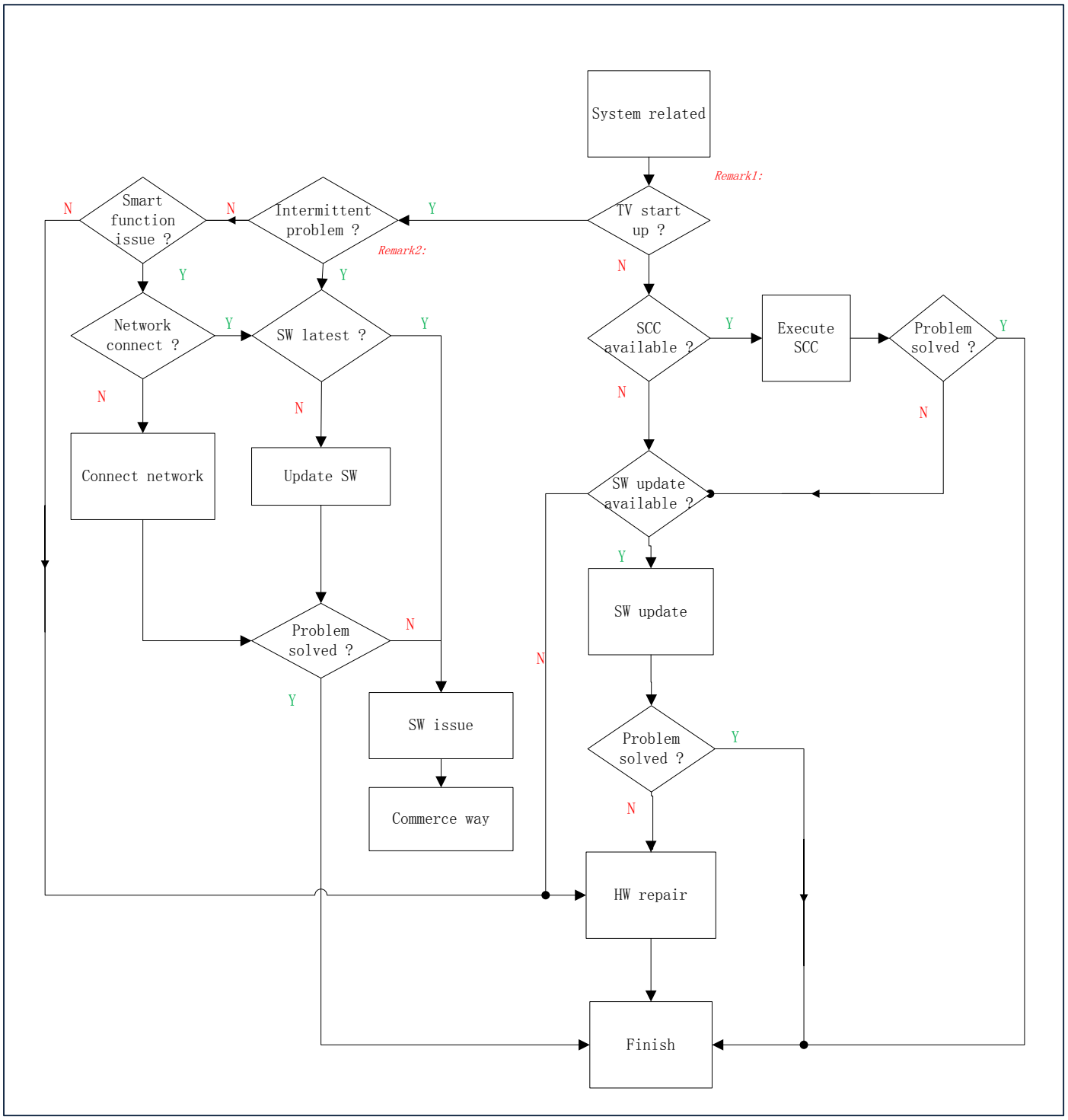

Remark1 : What is System related issue ?

1.Permanent reboots
2.Intermittent reboots
3.No function, no standby LED (set dead)
4.No function, blinking LED
5.Set freezes, intermittently
6.Slow response to user interaction
7.Switches ON by itself
8.Switches Off by itself
9.Stuck in standby mode / unable to start up
10.Stuck on PHILIPS / ANDROID logo
11.CAM not recognized by TV
12.CAM authentication issue
13.Misc CAM issue
14.IP-EPG issues
15.BC-EPG issues
16.PVR issues w/ BC-EPG
17.PVR issues w/ IP-EPG
18.PVR issues / generic
19.EDFU-related issue
20.Features not available in UI / cannot be activated

Remark2 : How to judge intermittent issue ?

1.When the problem happened can be solved by:
1)AC off AC on
2)DC off DC on
3)RC switch different source

2.The problem intermittent happened

7. Electrical Diagram

7.1 Block diagram

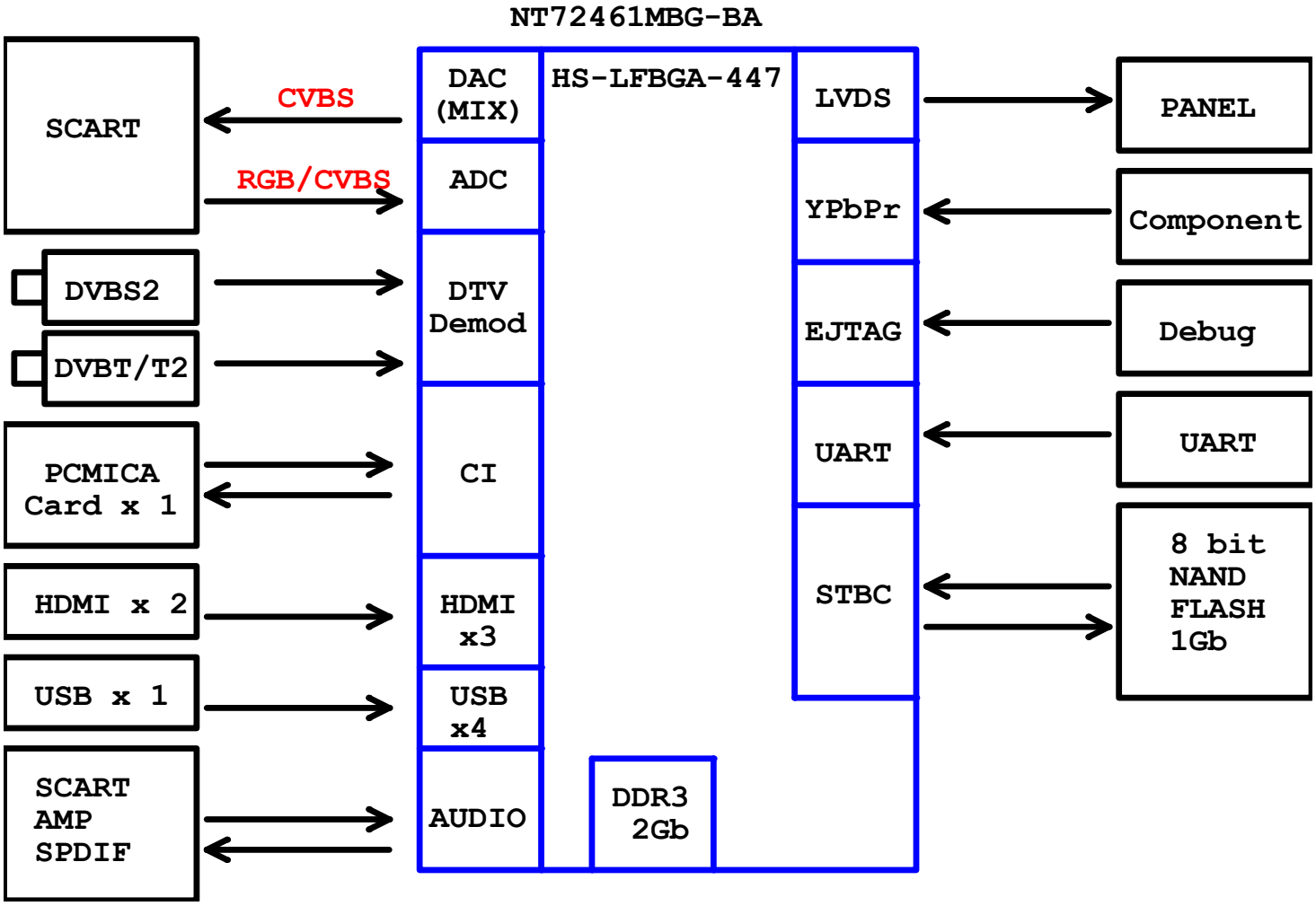

7.2 Power Supply

Power architecture of this platform.

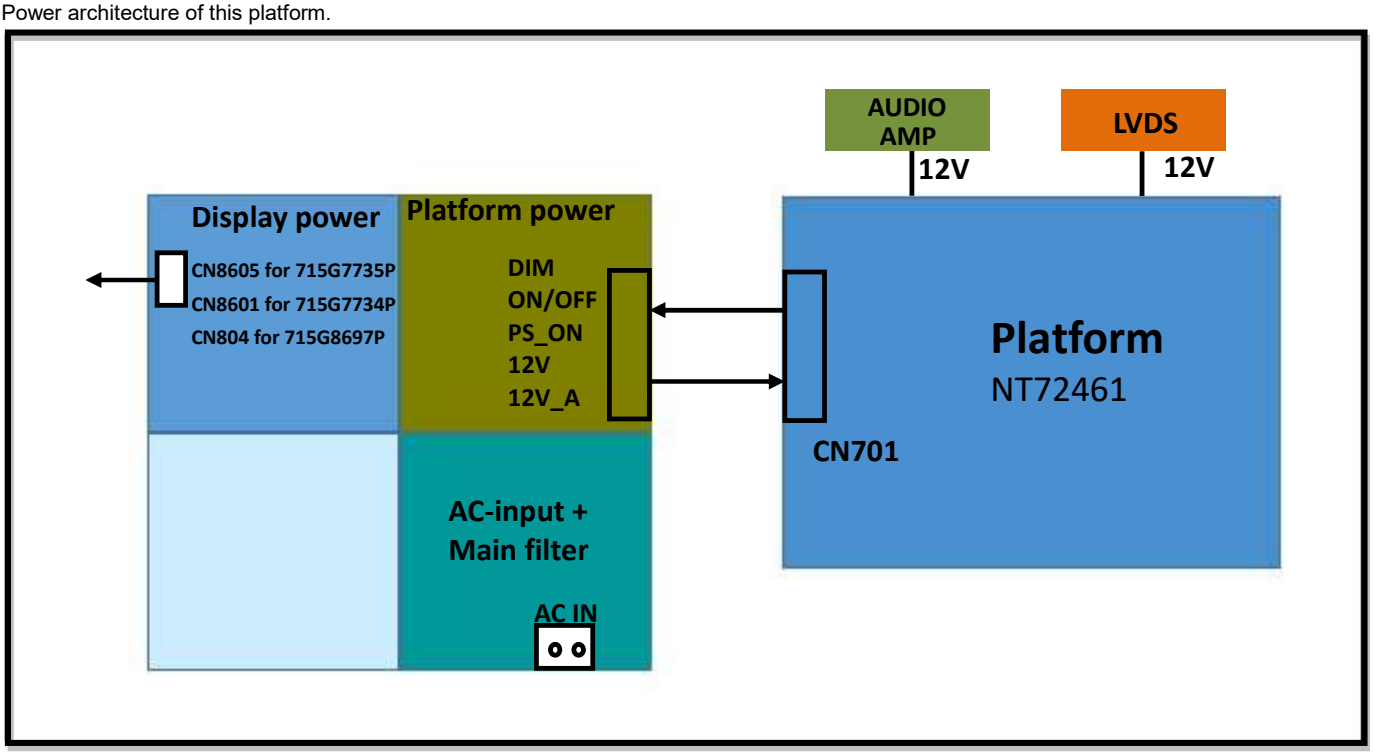

7.3 Power tree

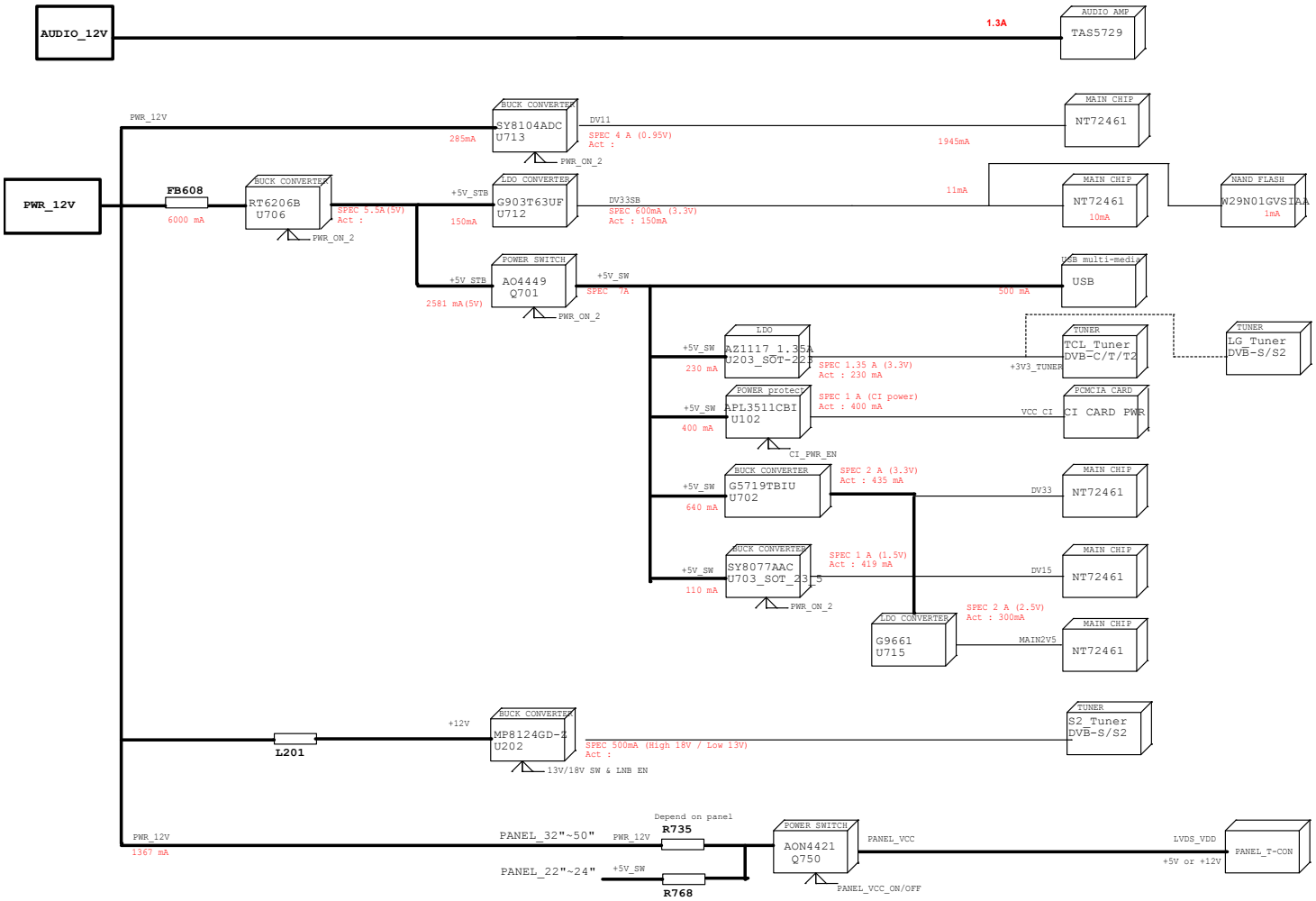

7.4 Power layout SSB

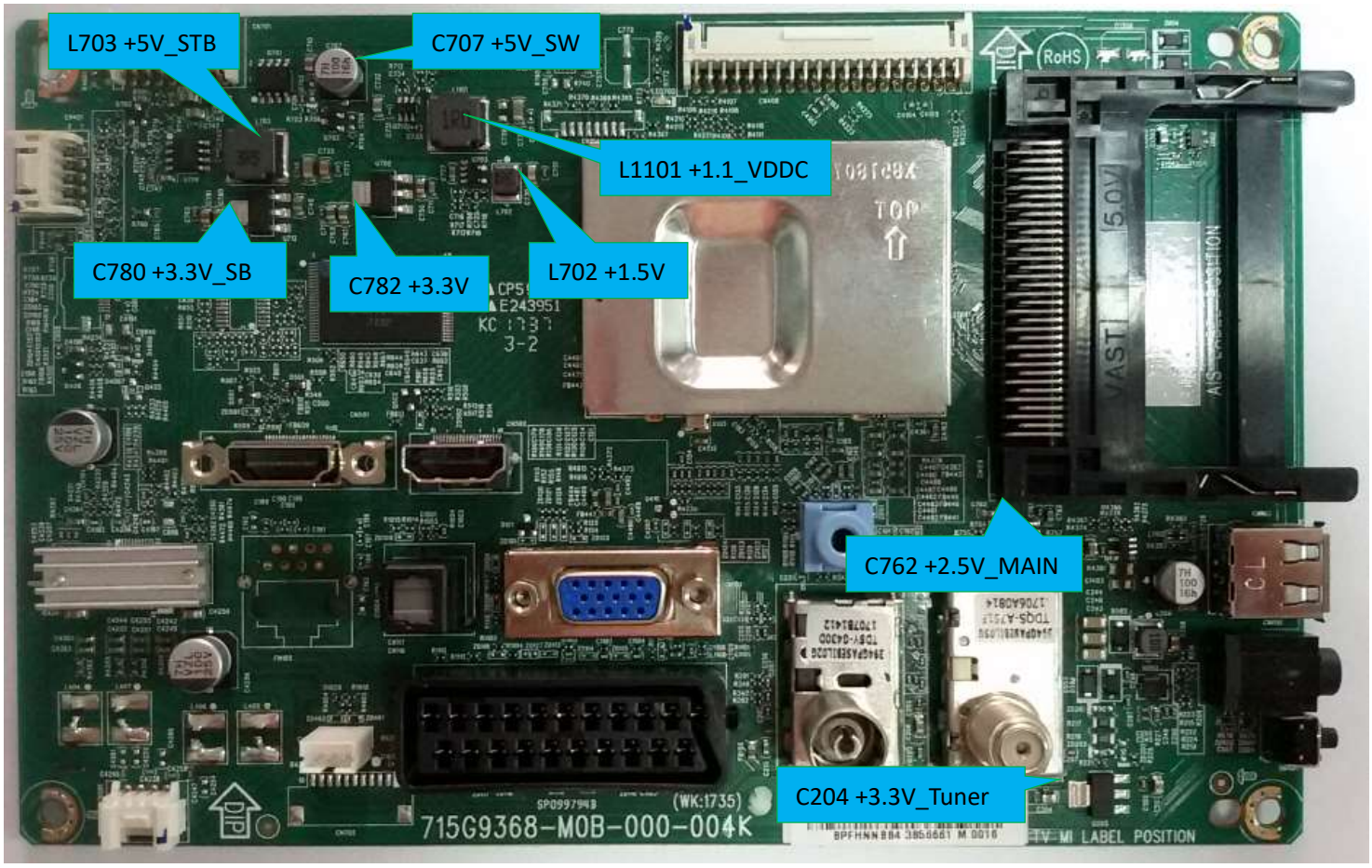

Power SSB Top View

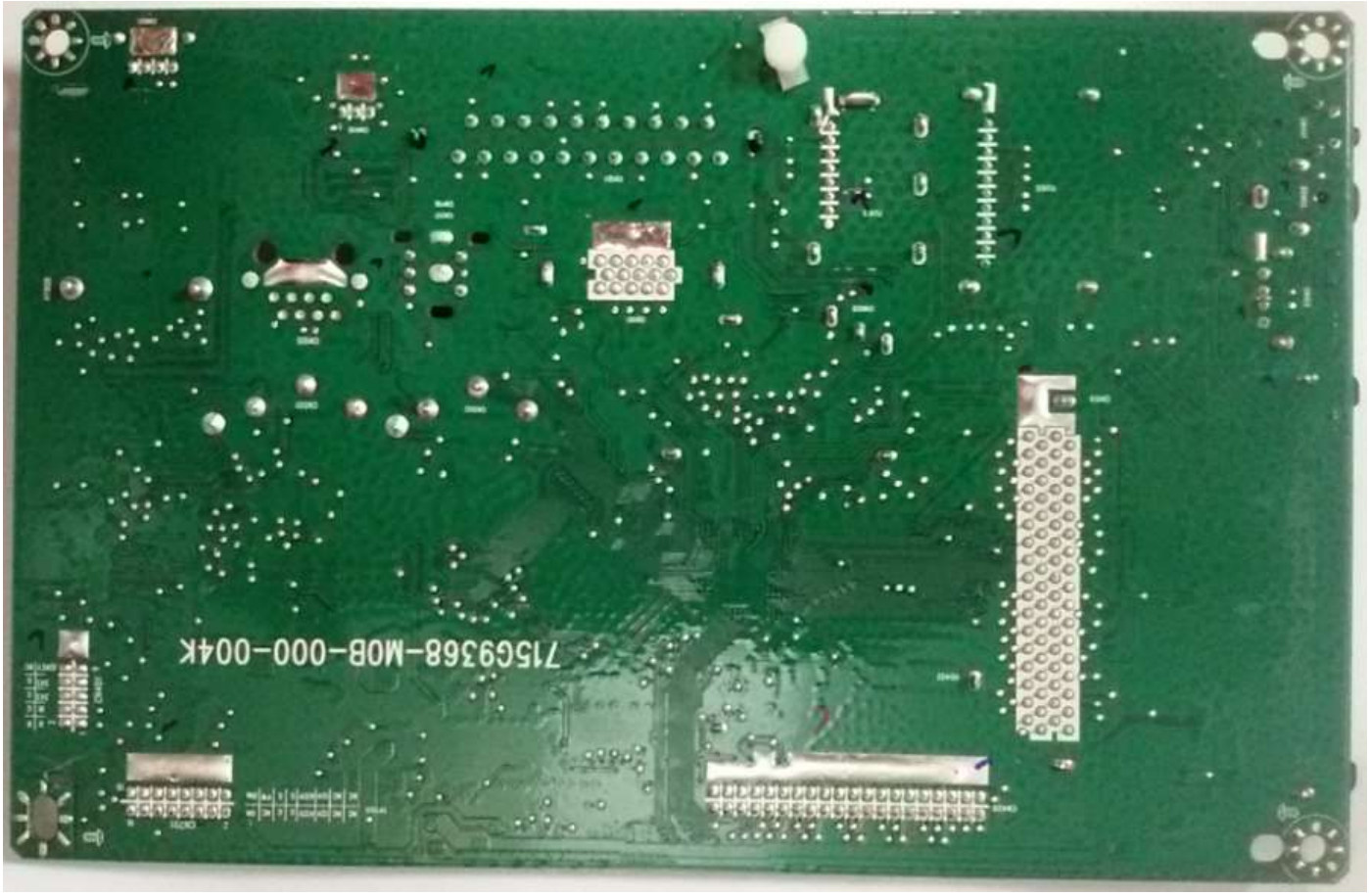

Power SSB Bottom View

8. IC Data Sheets

8.1 NT72461MBG-PA (IC U401)

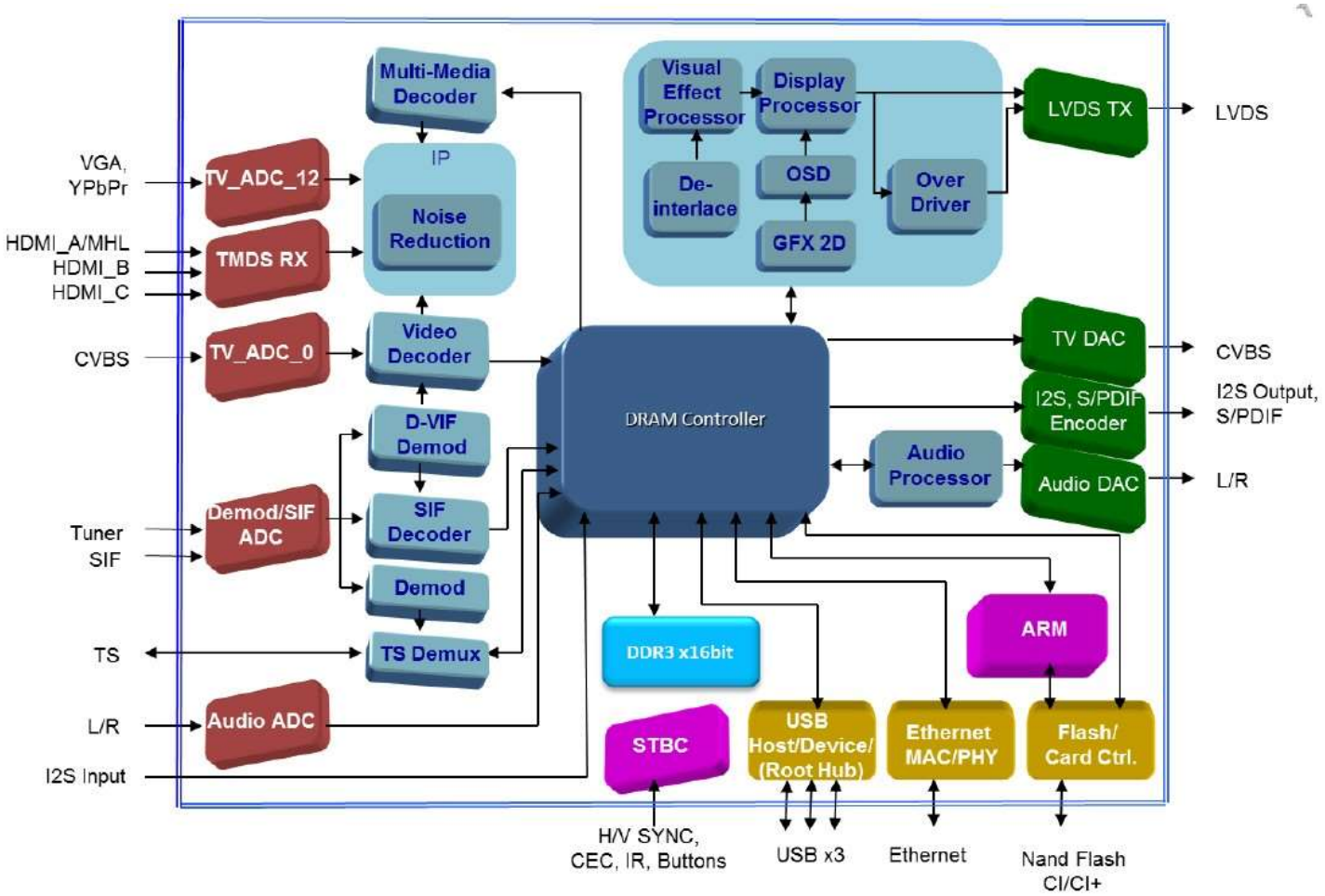

Total Ball: 447

GND Ball: 75

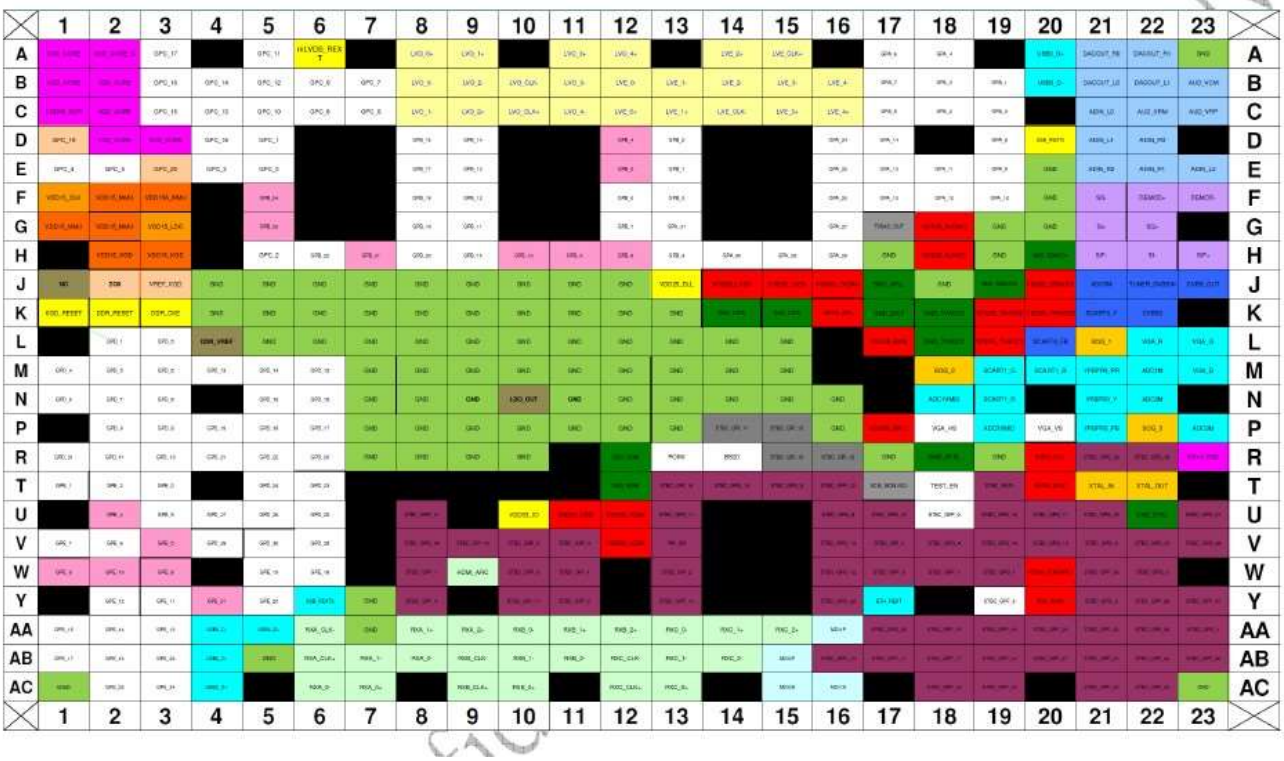

8.2 AD87010-LG48NRY (IC U601)

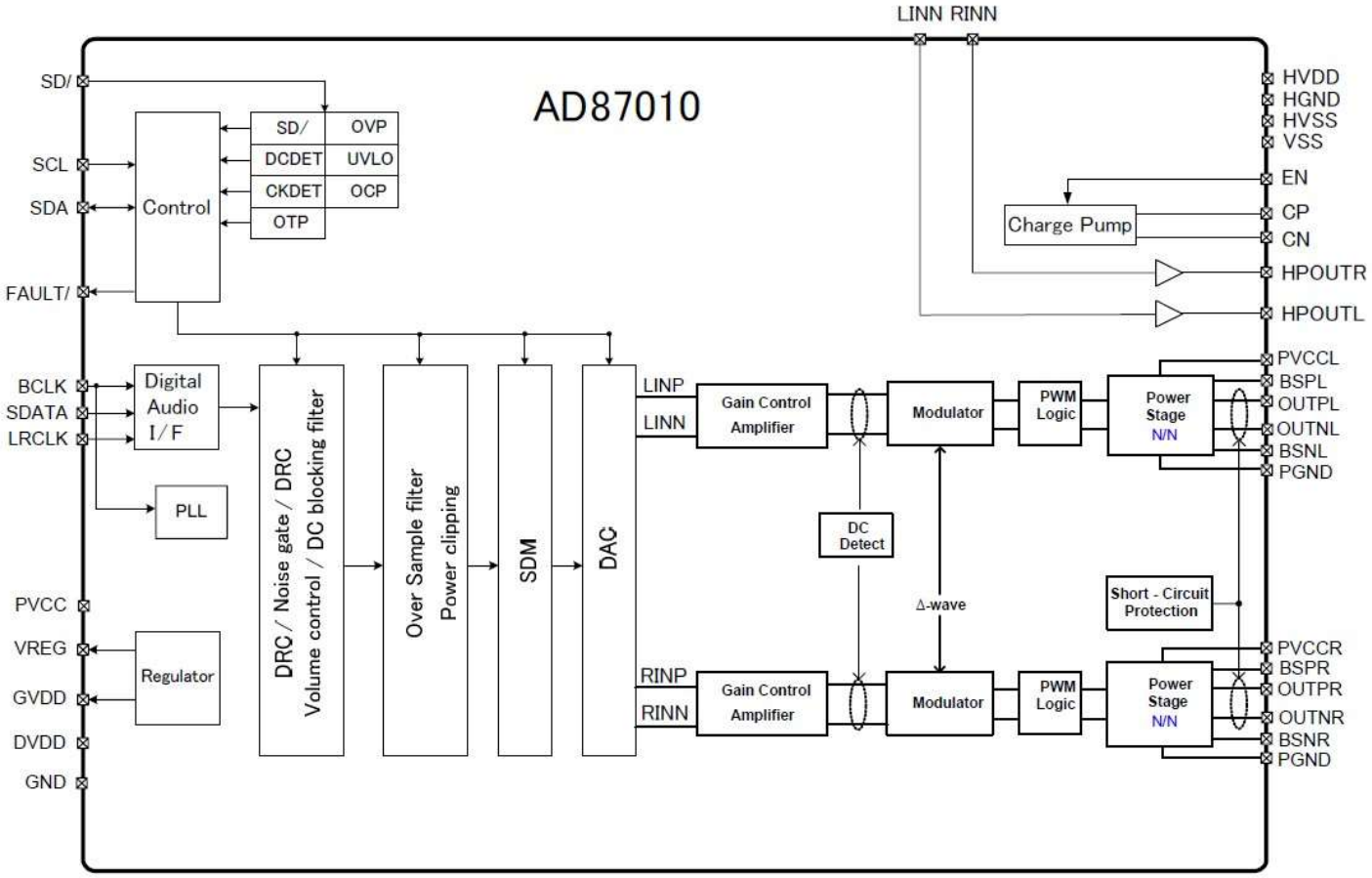

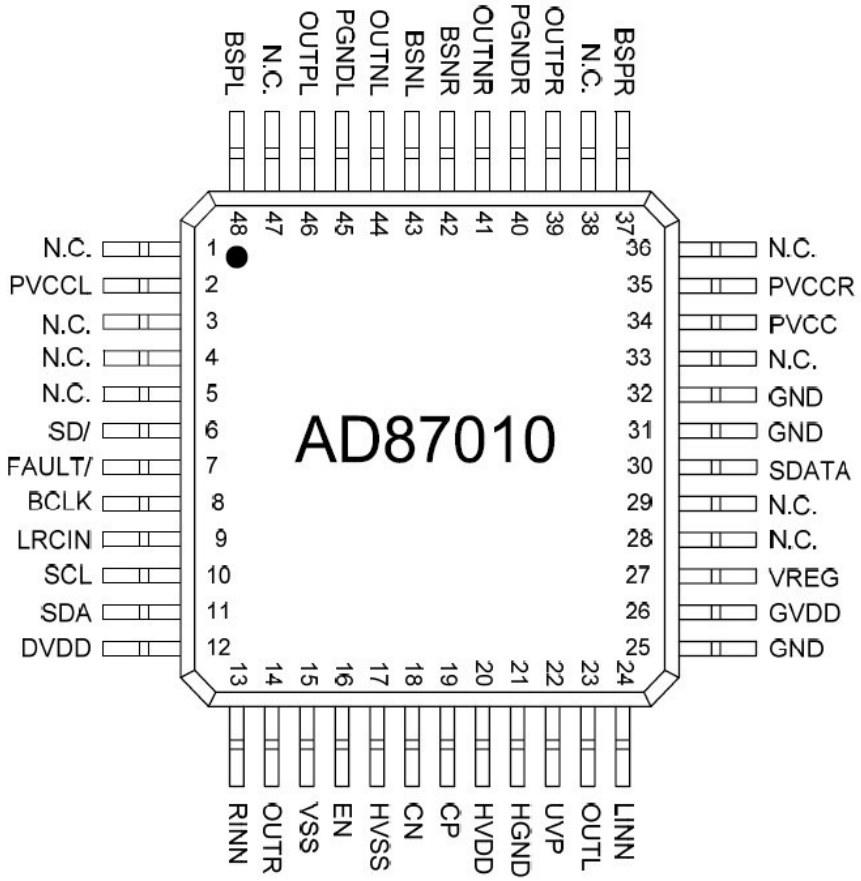

8.3 AD22650-QH14NAR (IC U602)

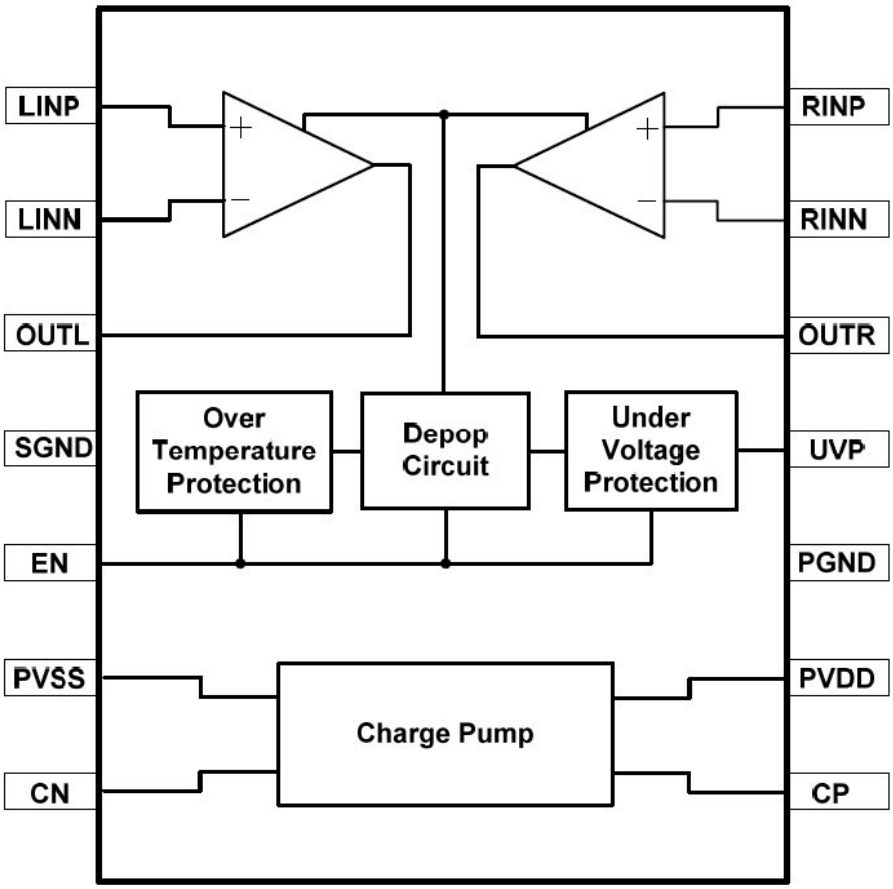

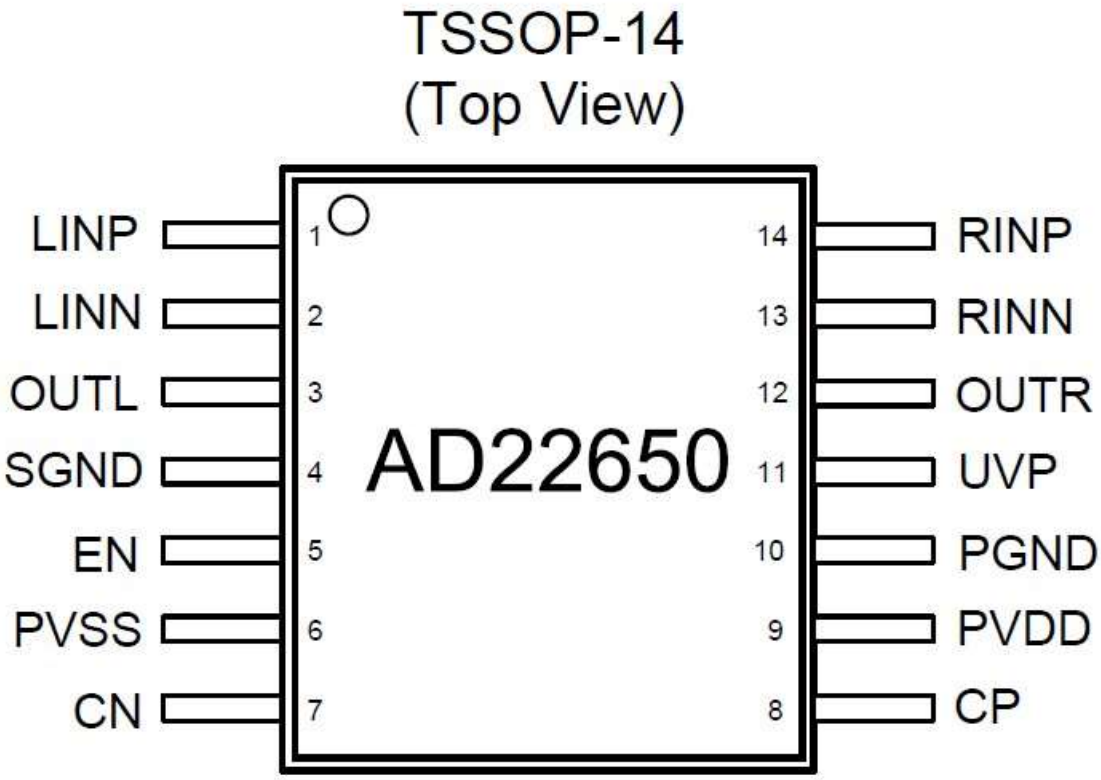

8.4 TDSY-G430D (EU TU102)

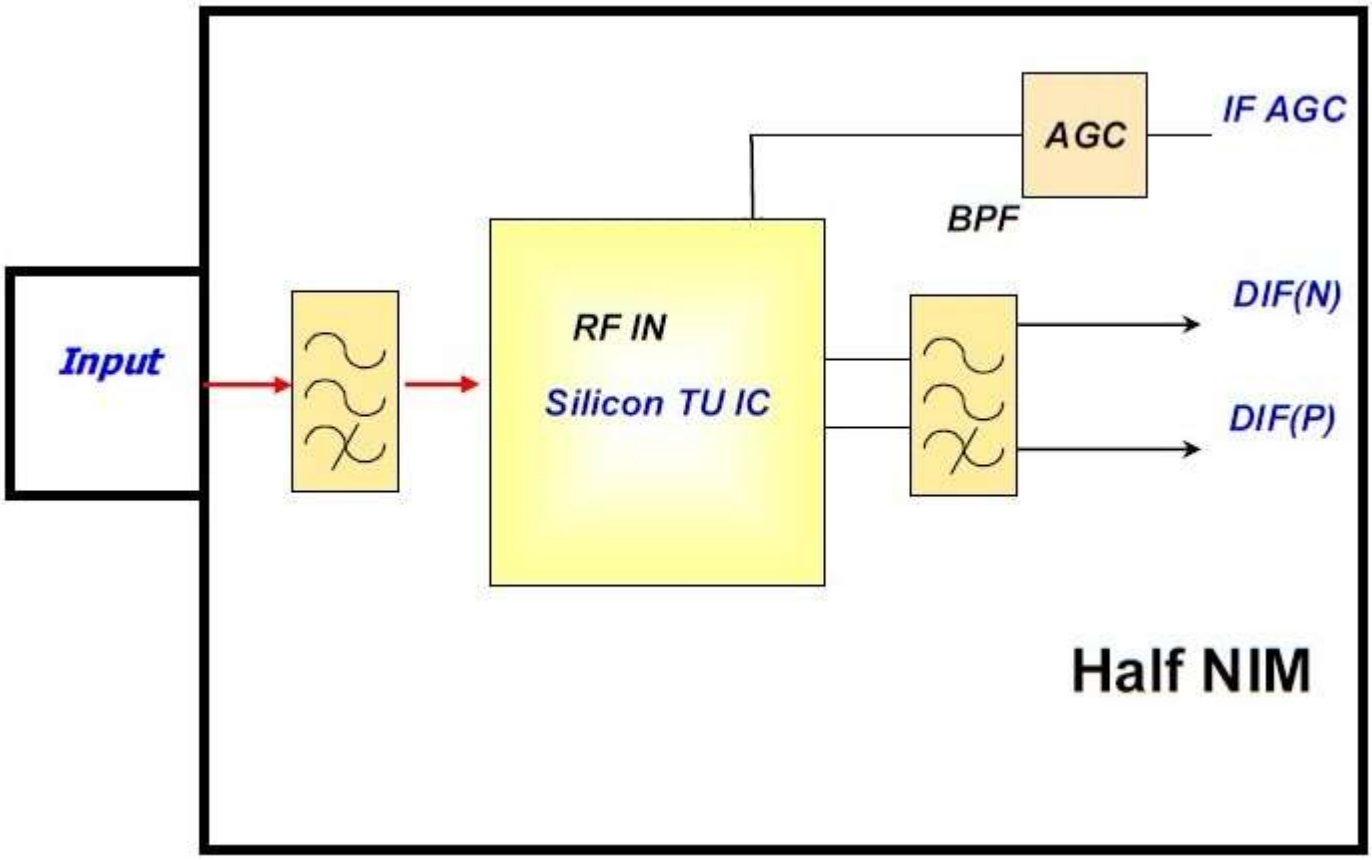

Pin Description

Pin No	Pin Name	Pin Description
1	Ant. PWR	Ant. PWR (Optional)
2	+B1(+3.3V)	+3.3V Supply Voltage
3	SDA	I2C Data
4	SCL	I2C Clock
5	DIF(N)	DIF(N) Output
6	DIF(P)	DIF(P) Output
7	IF AGC	IF AGC Control

8.5 TDQS-A751F (EU TU103)

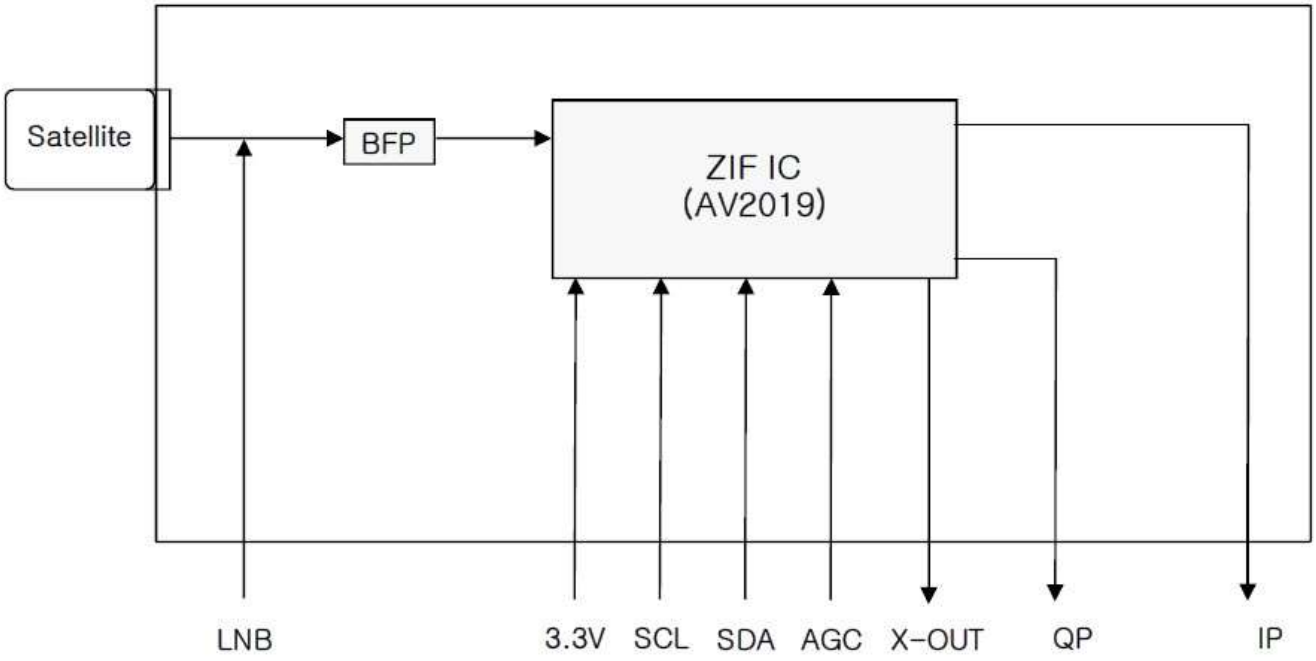

Pin Descriptions

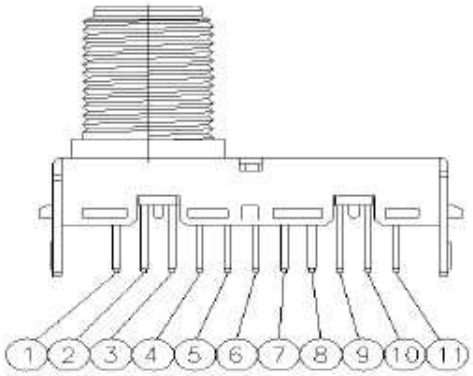

Pin No	Pin Name	Pin Description
1	LNB A	LNB power supply. To put 1nF of ceramic capacitor into ground.
2	NC	No Connection
3	TU 3.3V	+3.3V Supply for ZIF IC
4	NC	No Connection
5	QP Output	Base band output from Tuner to Demod.
6	IP Output	
7	NC	No Connection
8	AGC	AGC Voltage input
9	X-OUT	X-tal Output (refer to Address 0x01)
10	SDA	Serial programming interface data.
11	SCL	Serial programming interface clock.

9. Circuit Diagrams

9.1 715G8697 PSU (For 5403 Series)

9-1-1 Converter

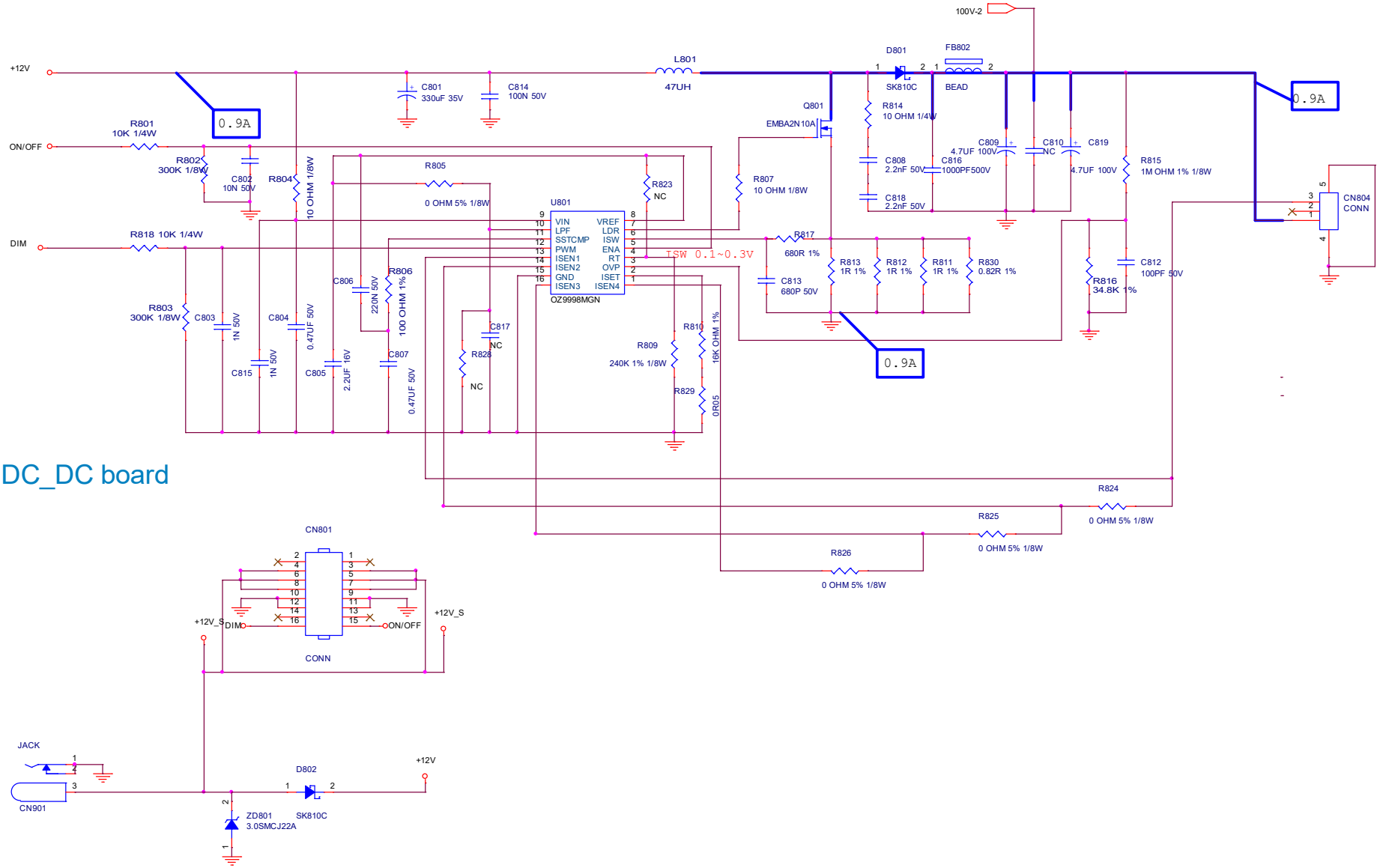

DC_DC board

9.2 715G7735 PSU (For 5303 Series)

9-2-1 POWER

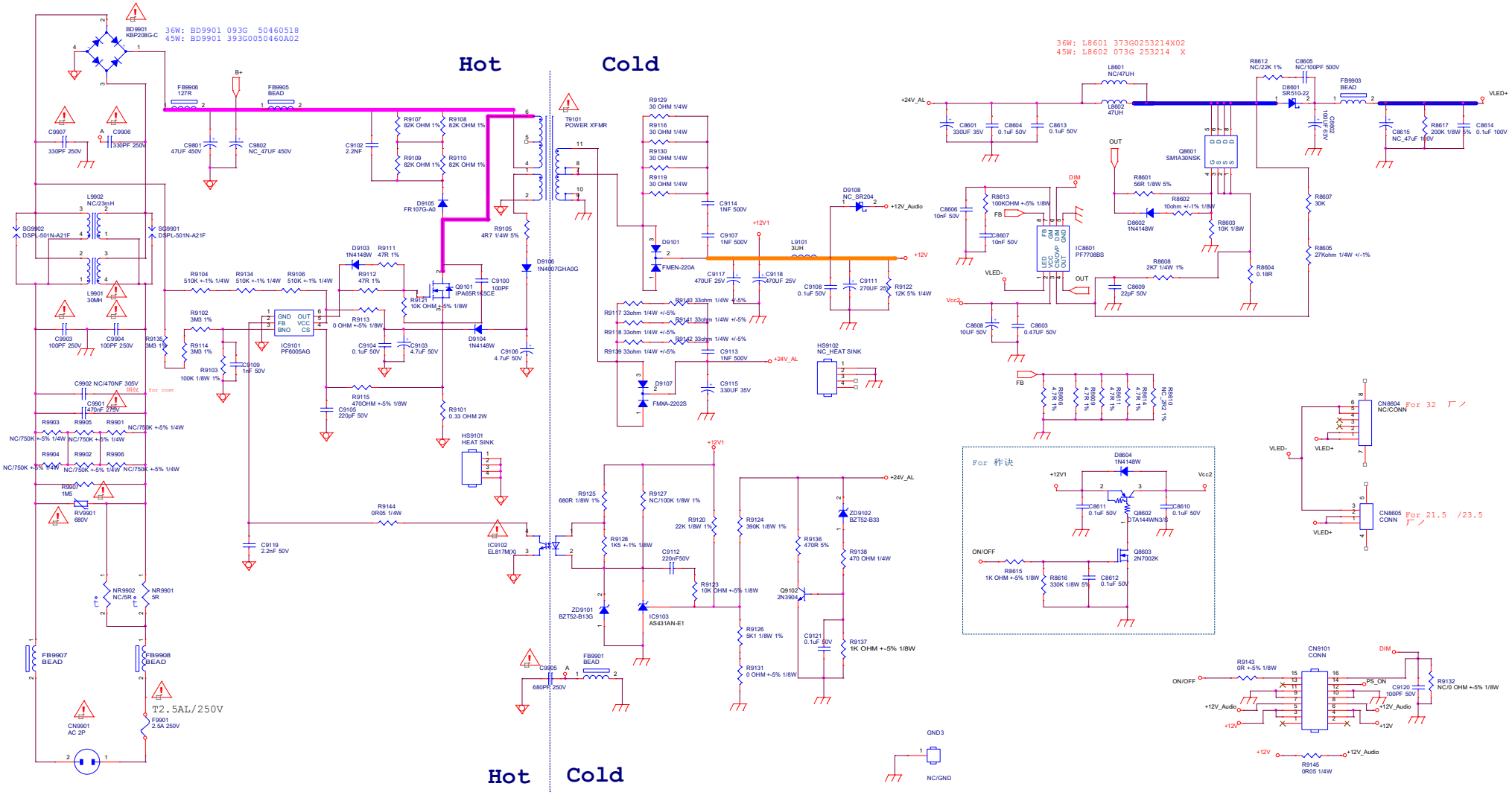

9.3 715G7734 PSU (For 5703 Series)

9-3-1 POWER

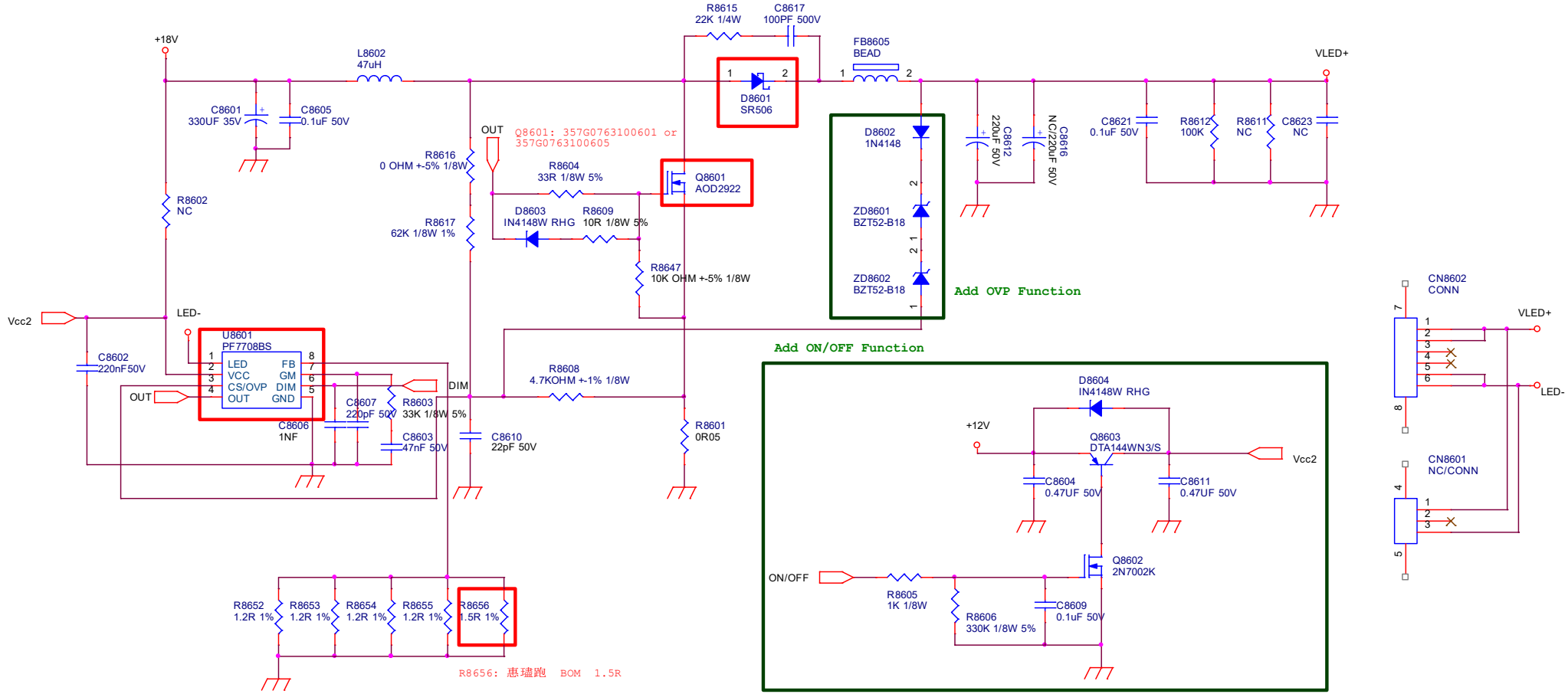

9-3-2 LED DRIVER

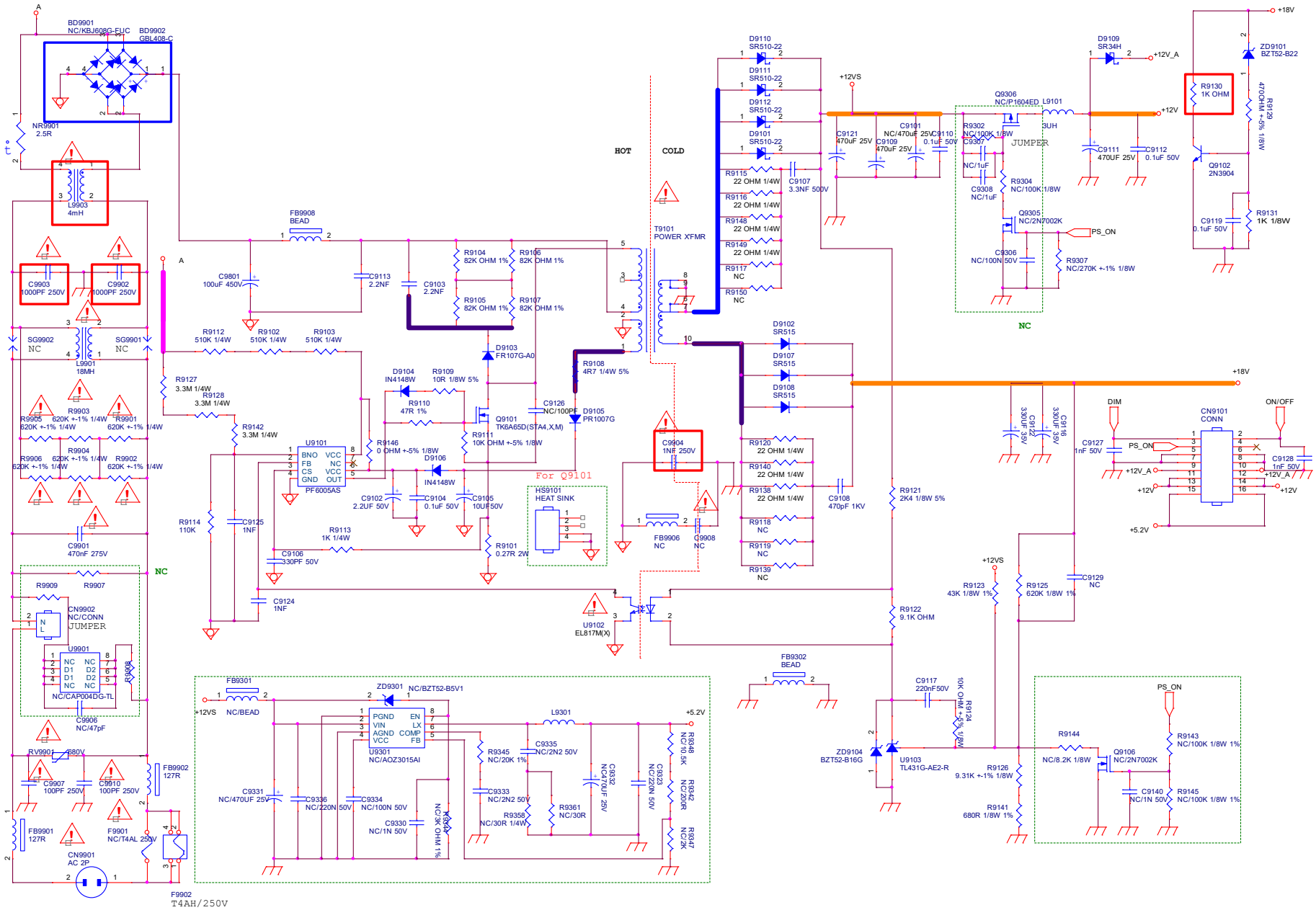

9.4 715G9368 SSB

9-4-1 System POWER

2K18 EU NT72461 - 2 Layers 193mm X 125mm

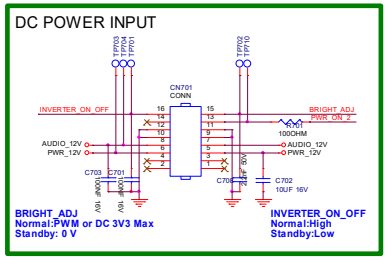

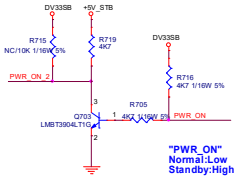

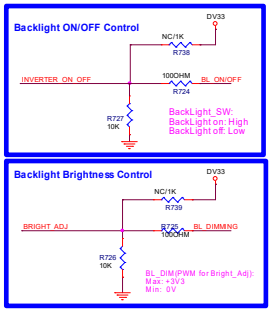

AUDIO_12V	AUDIO_12V	14
PWR_12V	PWR_12V	11,13,17
+5V_STB	+5V_STB	6,11,14
+5V_SW	+5V_SW	9,11,14,16,17,18,19
DV33	DV33	5,10,11,12,13,14,17,19
+3V3_TUNER	+3V3_TUNER	13
DV15	DV15	12
DV11	DV11	12
DV33SB	DV33SB	6,10,12,18,19
MAIN2V5	MAIN2V5	12
DV18SB	DV18SB	10,12
GND	GND	5,6,7,8,9,10,11,12,13,14,15,16,17,18,19

GPIO

BL_DIMMING	BL_DIMMING	11
BL_ON/OFF	BL_ON/OFF	10

STB CONTORL

PWR_ON	PWR_ON	10
PWR_ON_2	PWR_ON_2	18

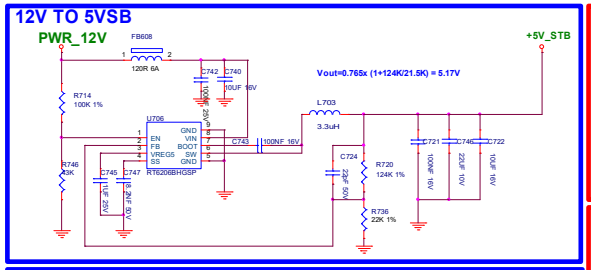

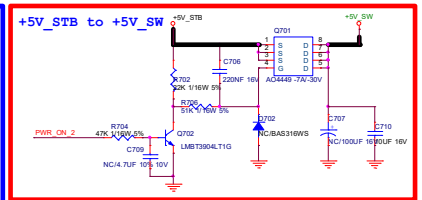

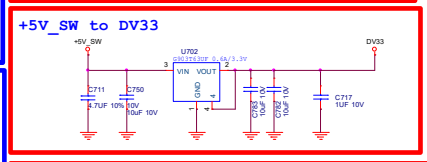

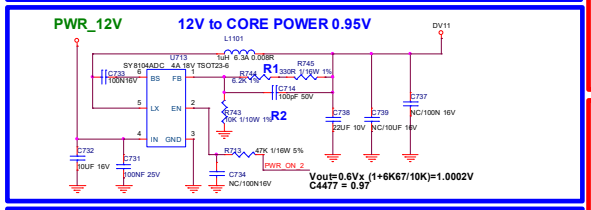

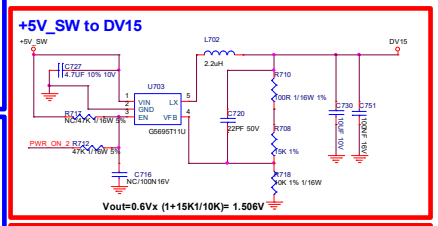

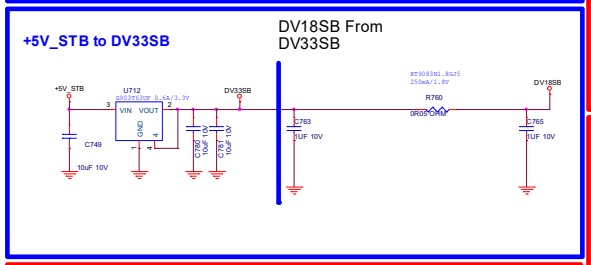

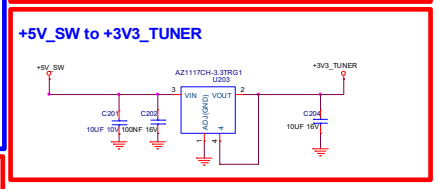

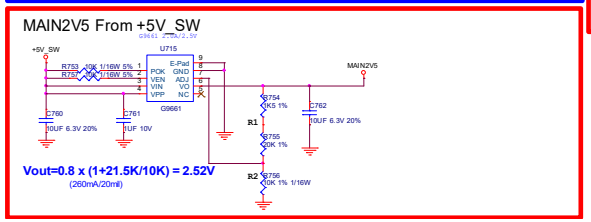

9-4-2 SPDIF/UART INPUT

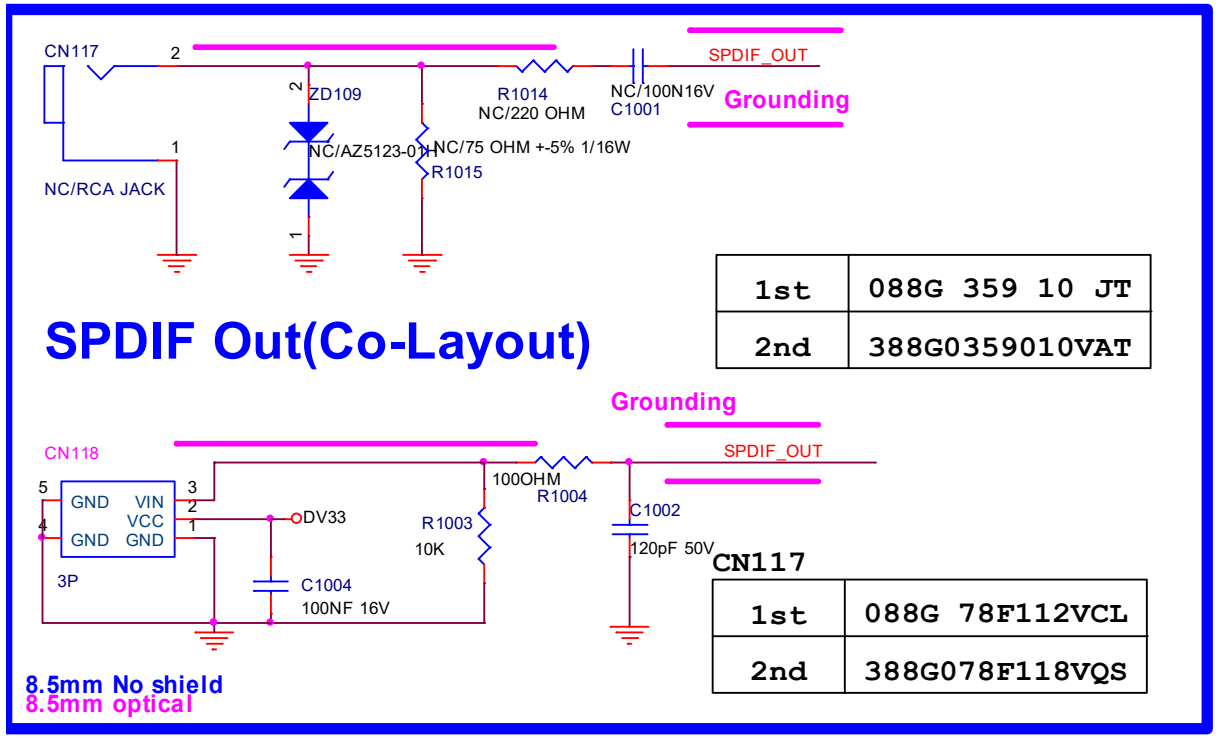

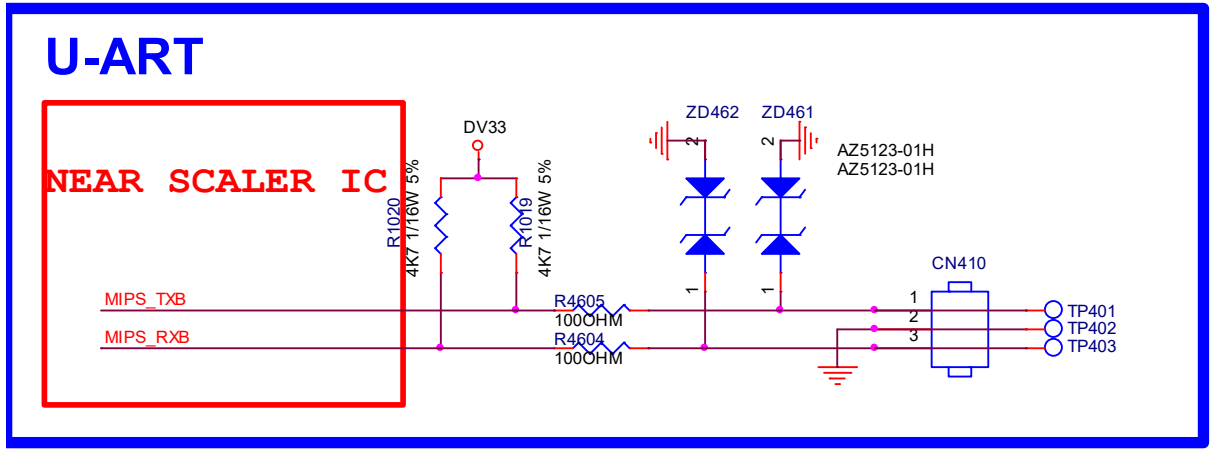

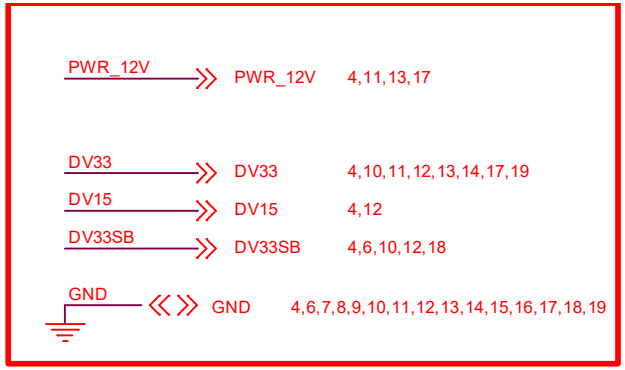

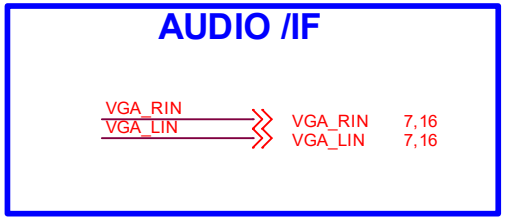

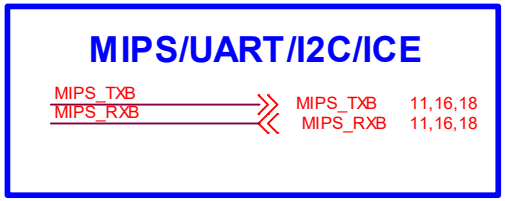

9-4-3 HDMI

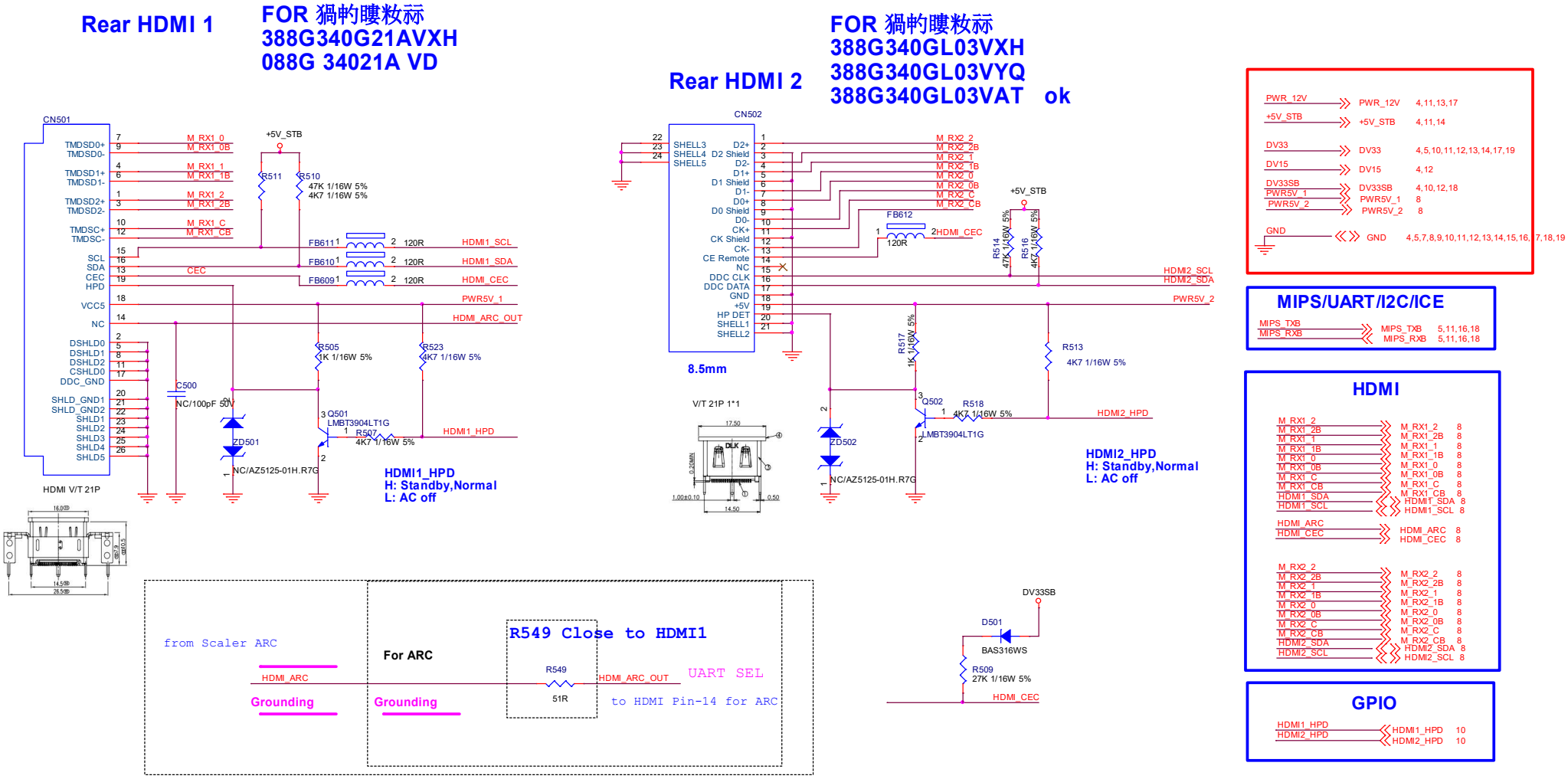
Rear HDMI 1
FOR 猧旳瞜敉祘
388G340G21AVXH
088G 34021A VD
CN501
TMDSD0+
TMDSD0-
TMDSD1+
TMDSD1-
TMDSD2+
TMDSD2-
TMDSC+
TMDSC-
SCL
SDA
CEC
HPD
VCC5
NC
DSHLD0
DSHLD1
DSHLD2
CSHLD0
DDC_GND
SHLD_GND1
SHLD_GND2
SHLD1
SHLD2
SHLD3
SHLD4
SHLD5
M_RX1_0
M_RX1_0B
M_RX1_1
M_RX1_1B
M_RX1_2
M_RX1_2B
M_RX1_C
M_RX1_CB
+5V_STB
R511
R510
47K 1/16W 5%
4K7 1/16W 5%
FB6111
FB6101
FB6091
120R
HDMI1_SCL
HDMI1_SDA
HDMI_CEC
PWR5V_1
HDMI_ARC_OUT
R505
1K 1/16W 5%
R523
4K7 1/16W 5%
C500
NC/100pF 50V
ZD501
NC/AZ5125-01H.R7G
Q501
LMBT3904LT1G
R507
4K7 1/16W 5%
HDMI1_HPD
HDMI1_HPD
H: Standby,Normal
L: AC off
HDMI V/T 21P
Rear HDMI 2
FOR 猧旳瞜敉祘
388G340GL03VXH
388G340GL03VYQ
388G340GL03VAT ok
CN502
SHELL3
SHELL4
SHELL5
D2+
D2 Shield
D2-
D1+
D1 Shield
D1-
D0+
D0 Shield
D0-
CK+
CK Shield
CK-
CE Remote
NC
DDC CLK
DDC DATA
GND
+5V
HP DET
SHELL1
SHELL2
M_RX2_2
M_RX2_2B
M_RX2_1
M_RX2_1B
M_RX2_0
M_RX2_0B
M_RX2_C
M_RX2_CB
FB612
120R
HDMI_CEC
R514
47K 1/16V 5%
R516
4K7 1/16V 5%
HDMI2_SCL
HDMI2_SDA
PWR5V_2
8.5mm
V/T 21P 1*1
R517
1K 1/16V 5%
R513
4K7 1/16V 5%
Q502
R518
4K7 1/16V 5%
HDMI2_HPD
LMBT3904LT1G
ZD502
NC/AZ5125-01H.R7G
HDMI2_HPD
H: Standby,Normal
L: AC off
from Scaler ARC
HDMI_ARC
Grounding
For ARC
Grounding
R549 Close to HDMI1
R549
51R
HDMI_ARC_OUT
UART SEL
to HDMI Pin-14 for ARC
DV33SB
D501
BAS316WS
R509
27K 1/16W 5%
HDMI_CEC
PWR_12V
+5V_STB
DV33
DV15
DV33SB
PWR5V_1
PWR5V_2
GND
MIPS/UART/I2C/ICE
MIPS_TXB
MIPS_RXB
HDMI
HDMI1_SDA
HDMI1_SCL
HDMI_ARC
HDMI_CEC
HDMI2_SDA
HDMI2_SCL
GPIO
HDMI1_HPD
HDMI2_HPD

9-4-4 NT72461_ADC/DAC/AUDIO/SIF

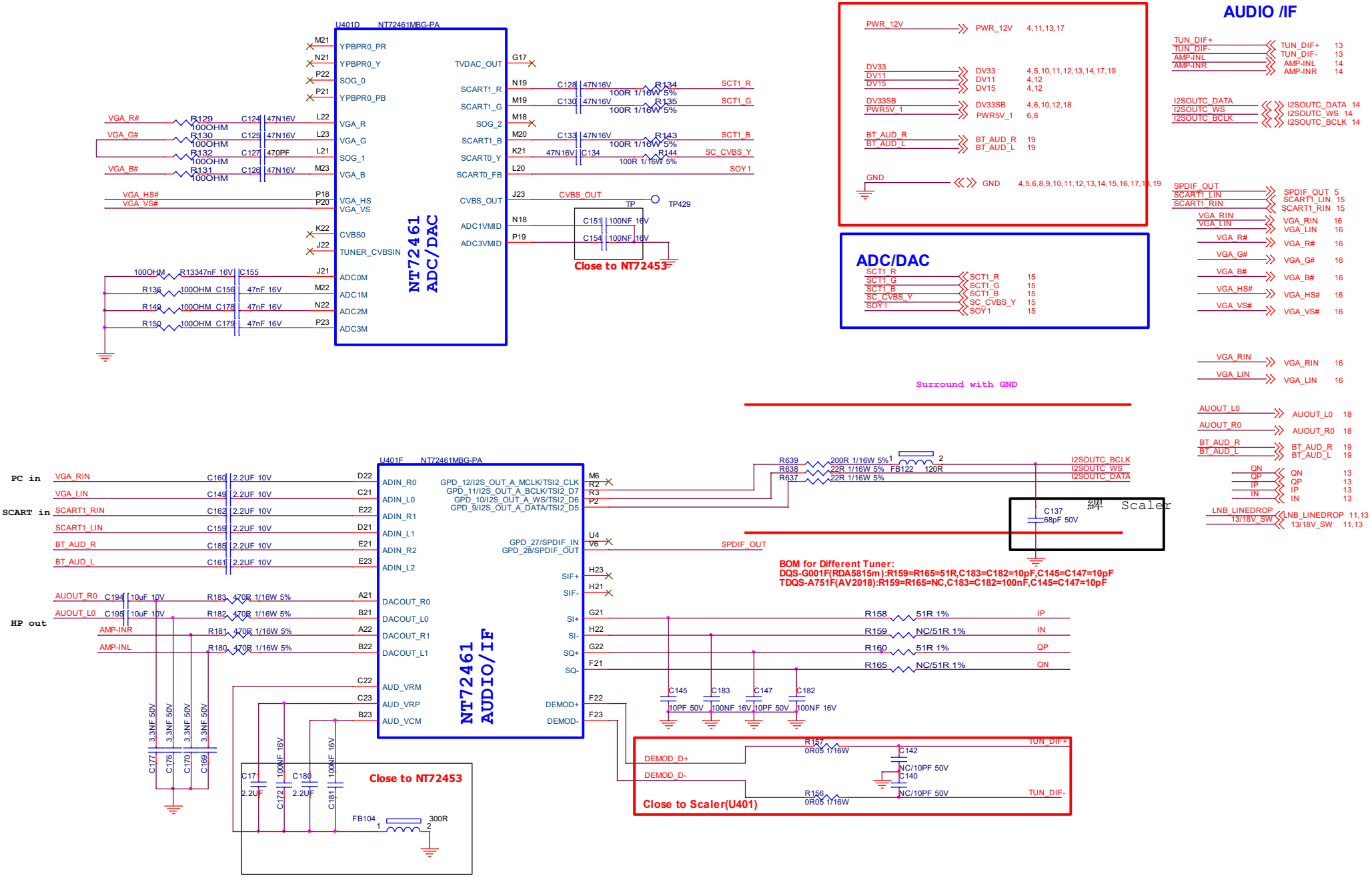

9-4-5 NT72461_HDMI/LVDS OUT

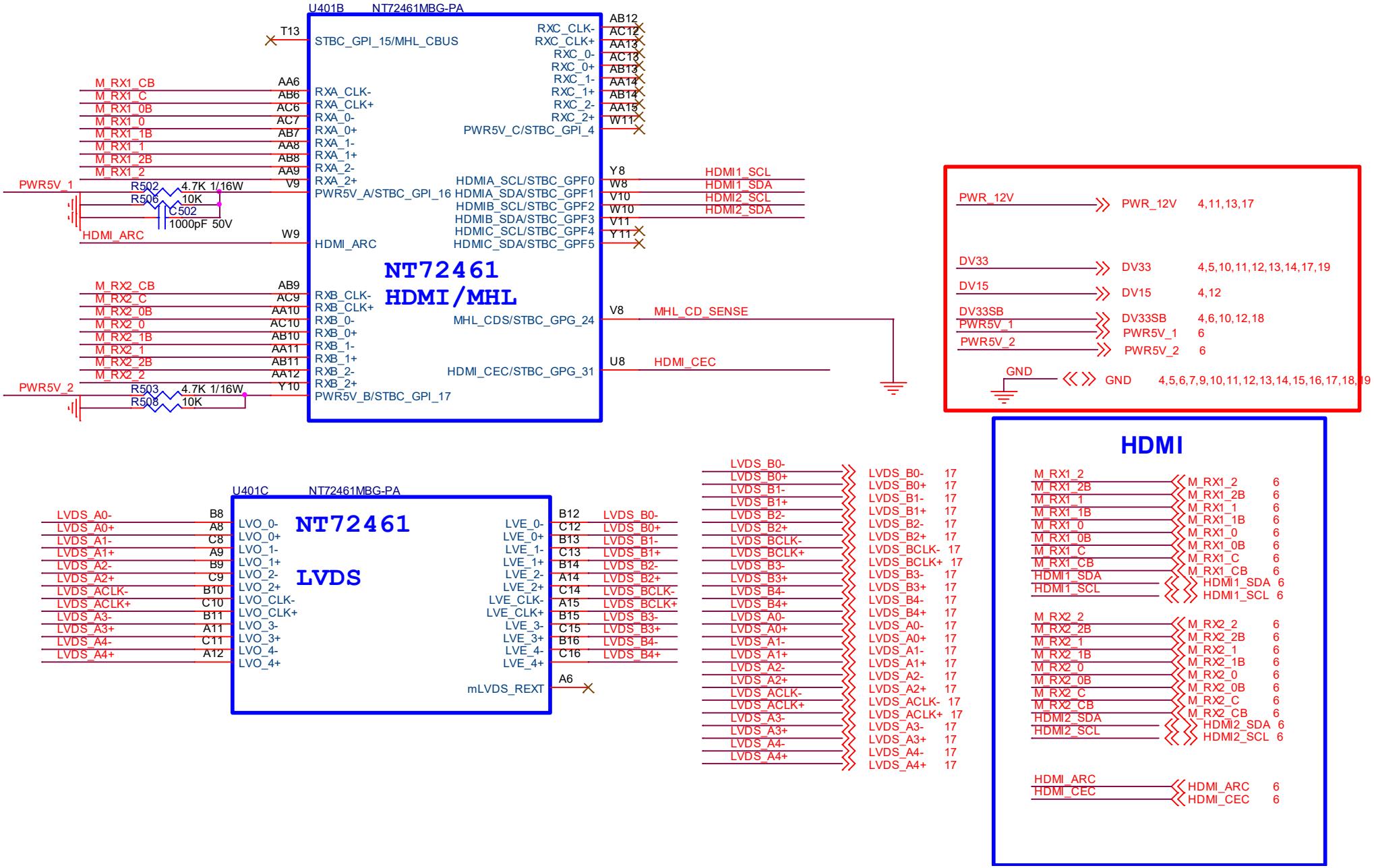

9-4-6 NT72461_CI

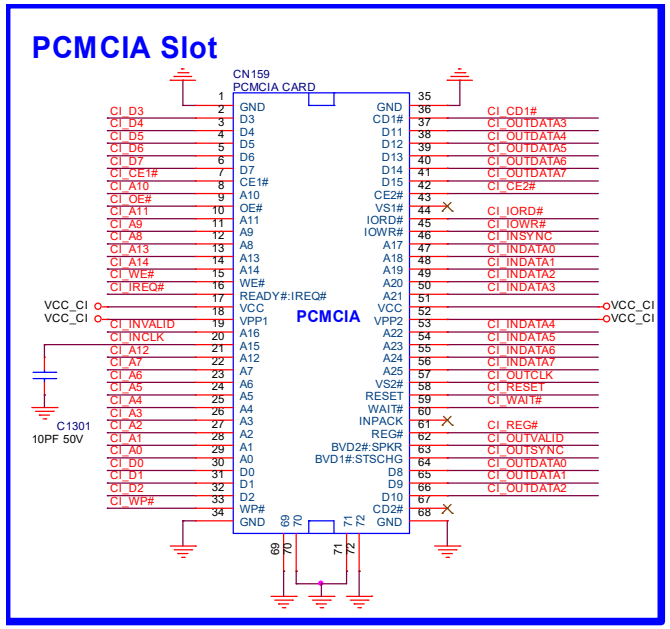

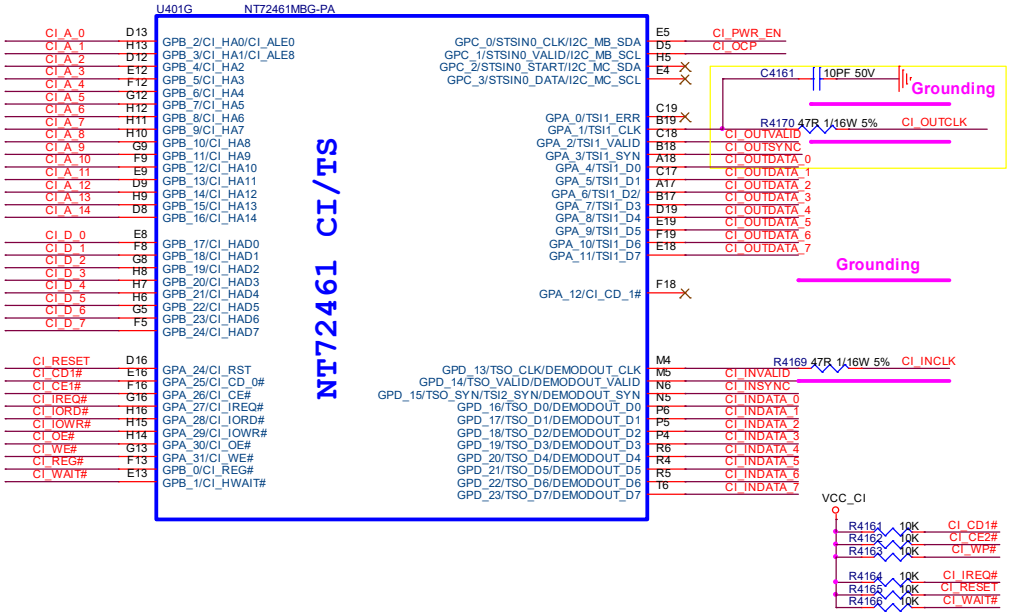

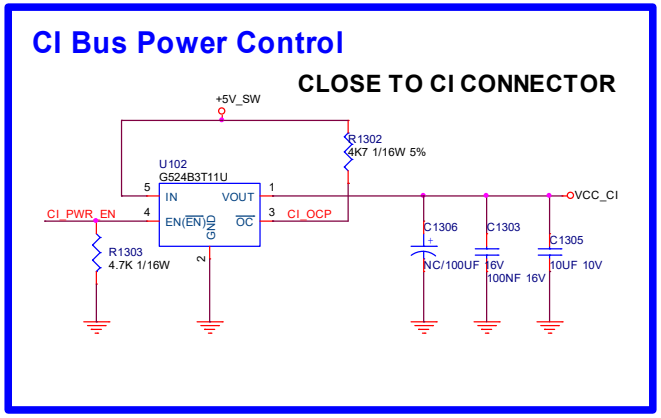

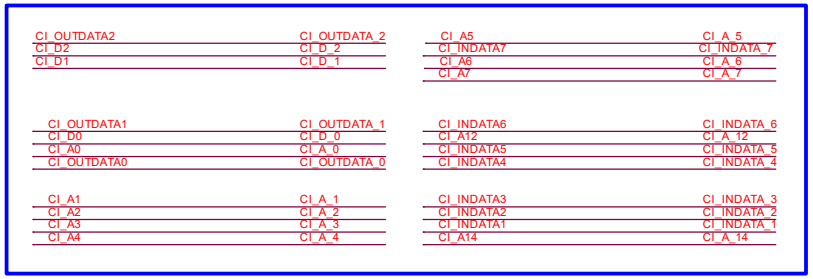

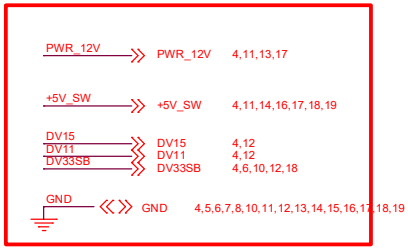

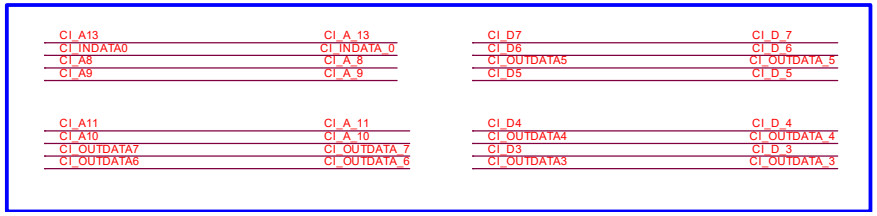

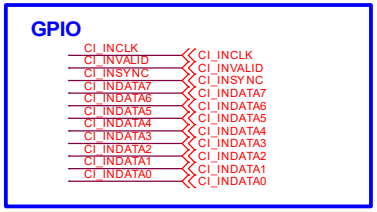

9-4-7 NT72461_STBC/FLASH/RJ45

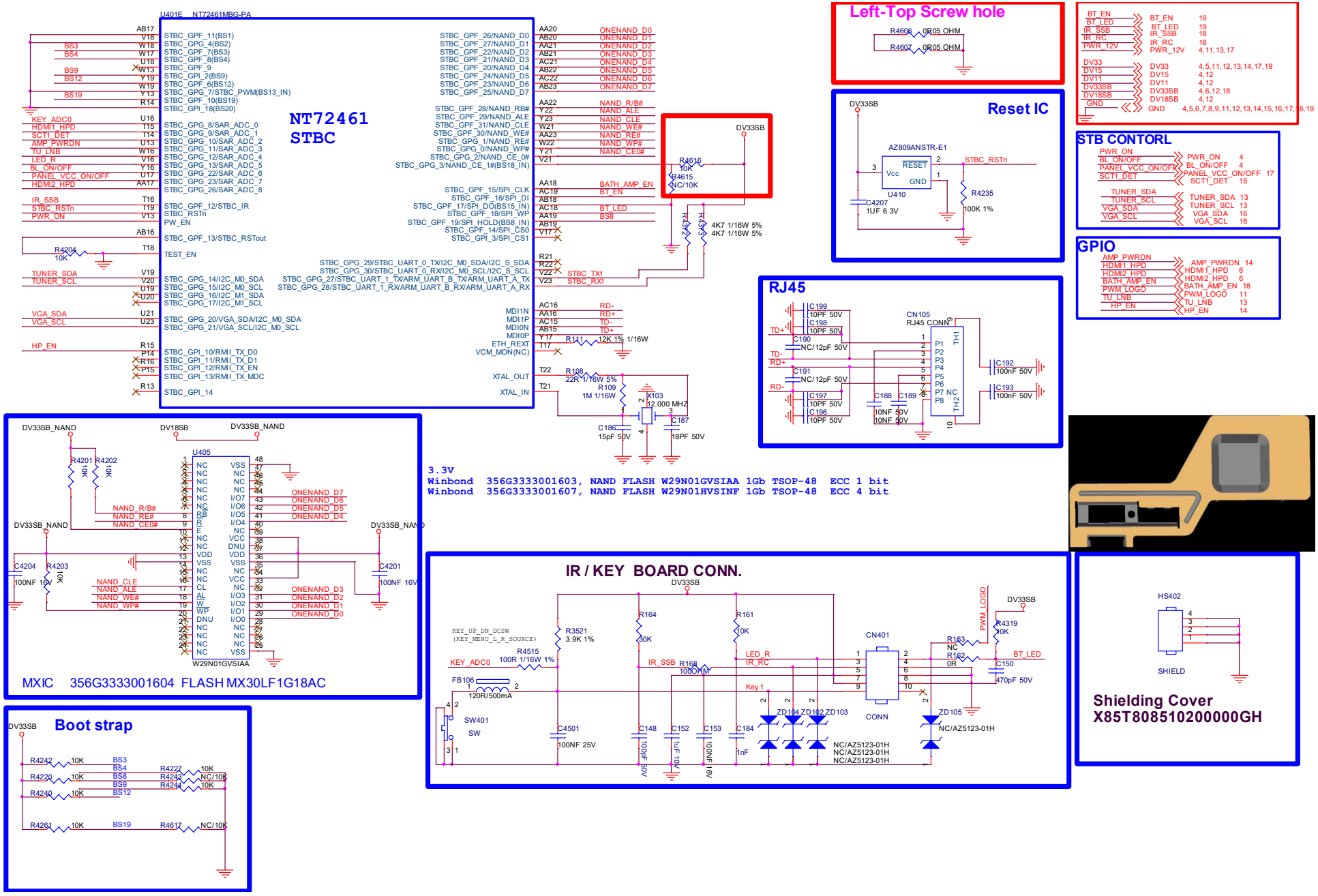

9-4-8 NT72461_USB/GPIO

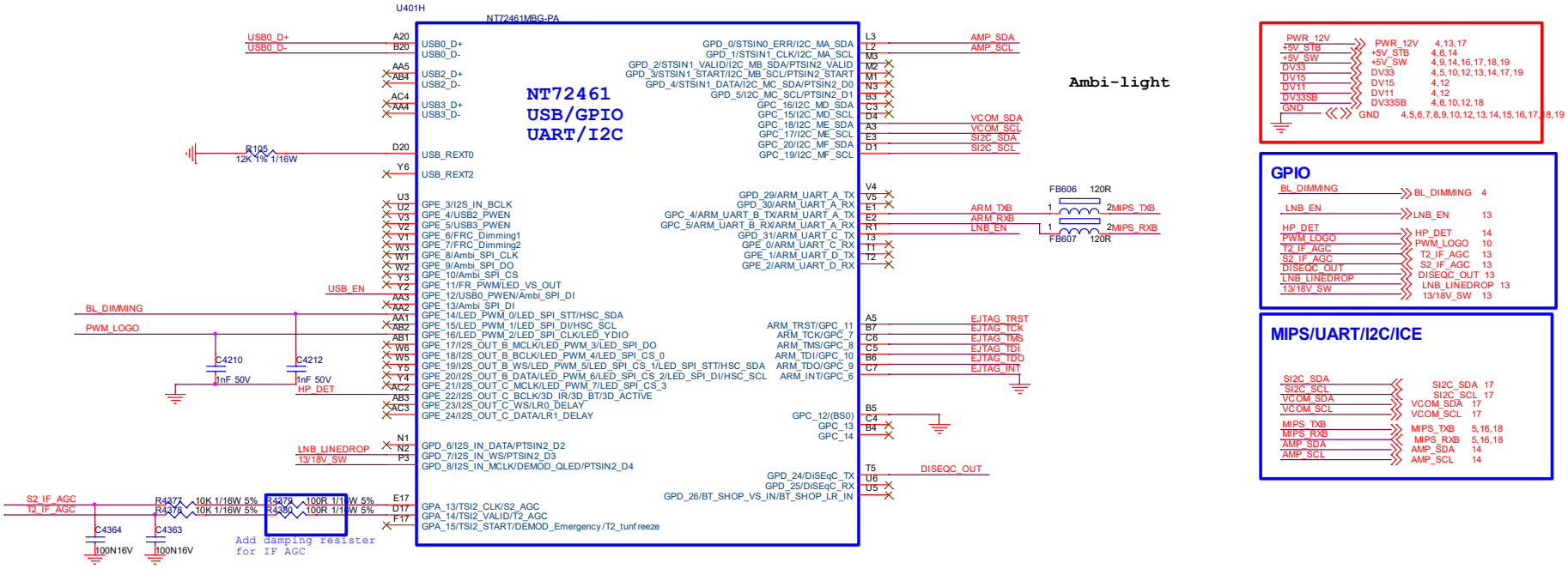

388G352F6B3FAT

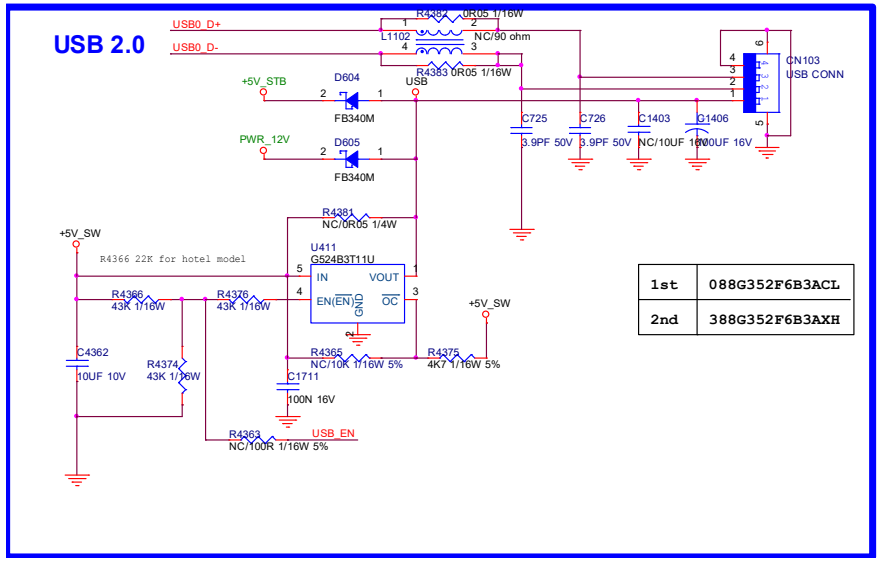

1st	088G352F6B3ACL
2nd	388G352F6B3AXH

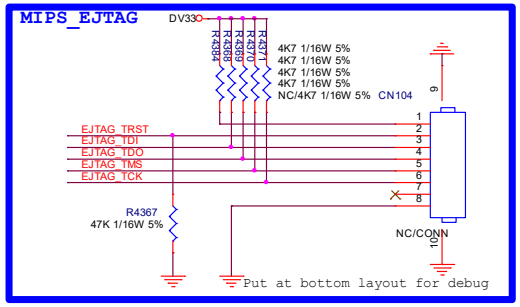

9-4-9 NT72461_POWER

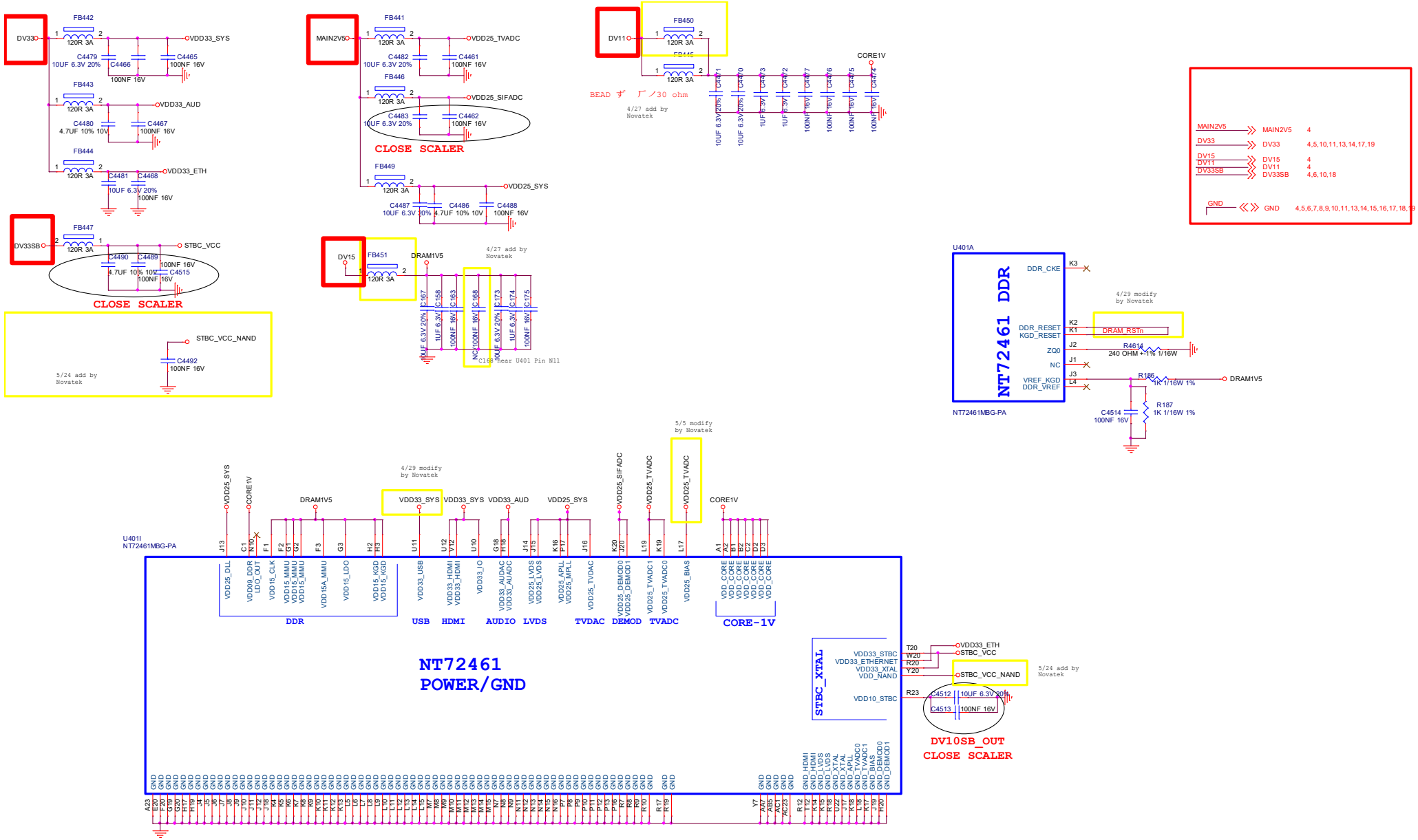

9-4-10 T2 /S2 Tuner

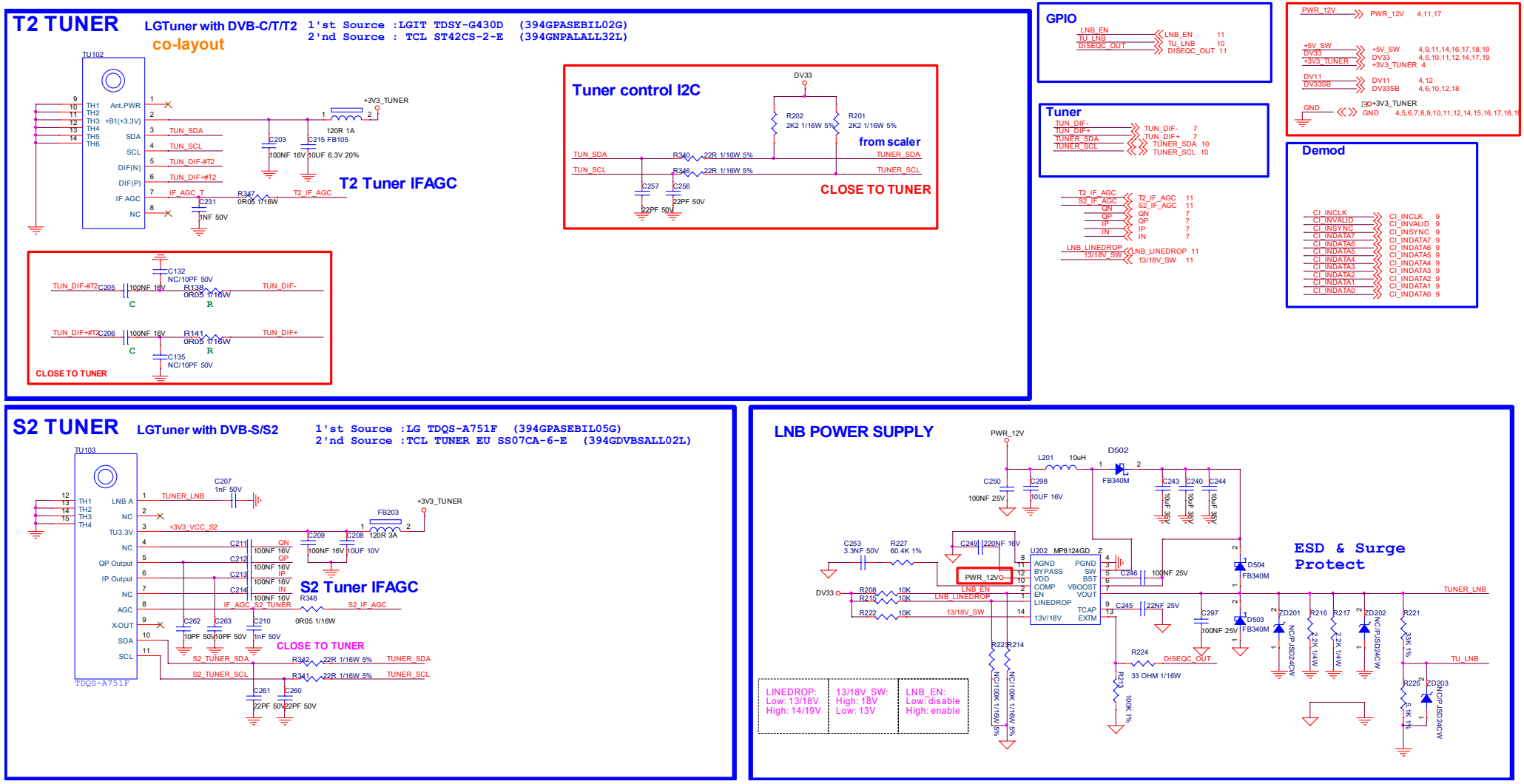

9-4-11 SPK AMP/HP OUT

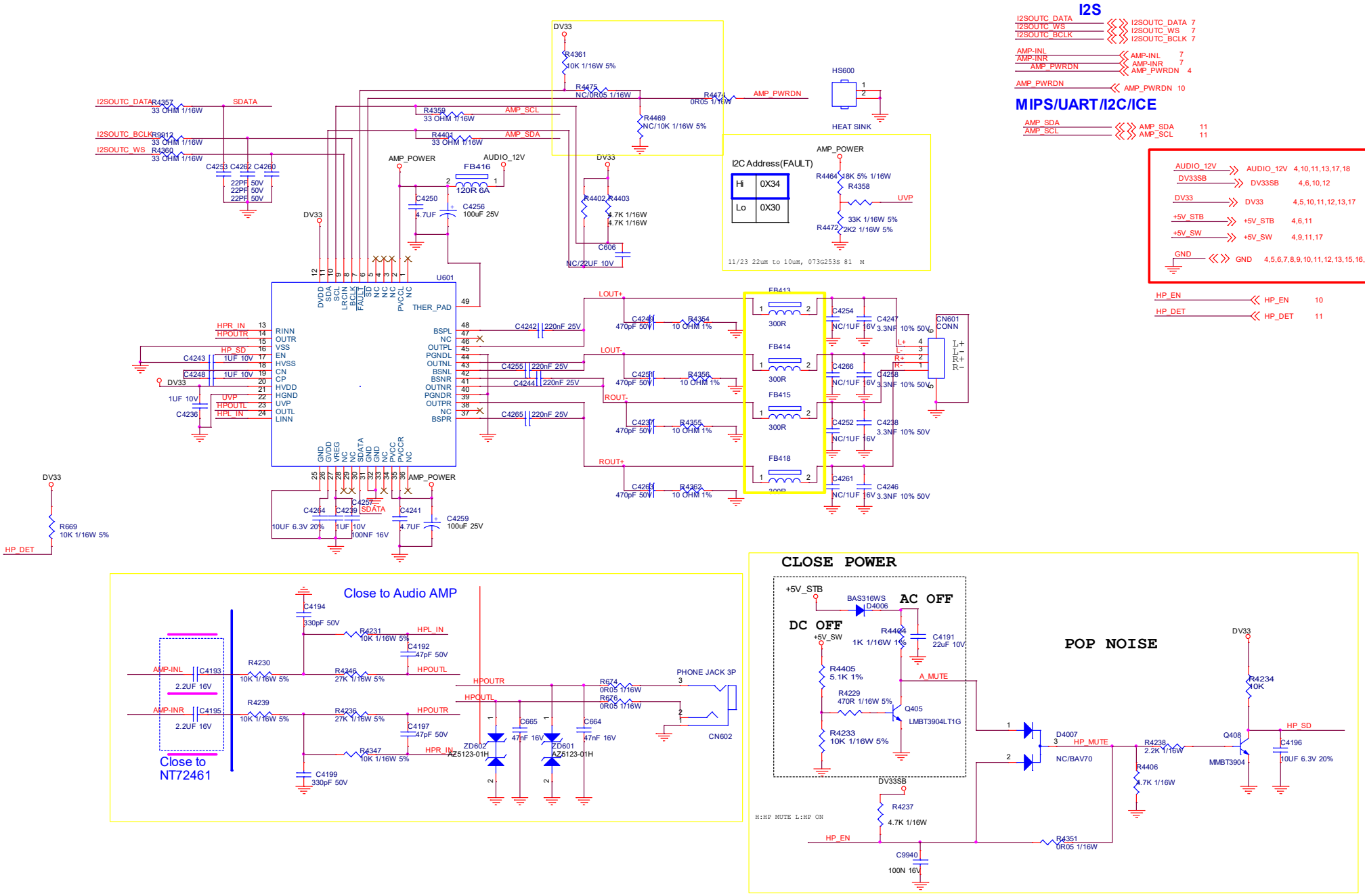

9-4-12 SCART

Helf SCART(RGB+CVBS+L/R IN)

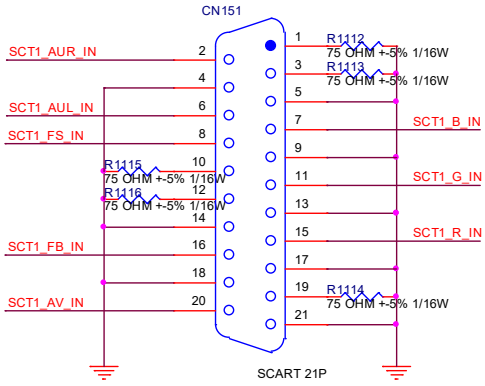

8.5mm No shield

CVBS IN

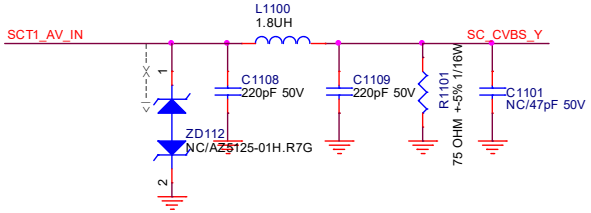

RGB IN

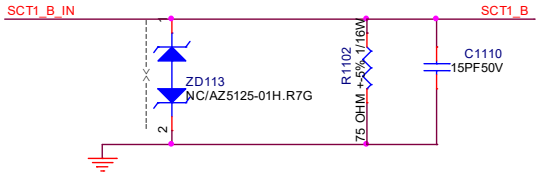

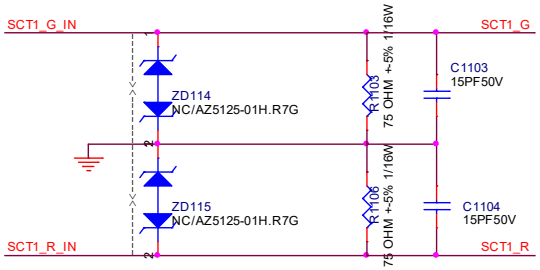

FAST BLANKING/SOY

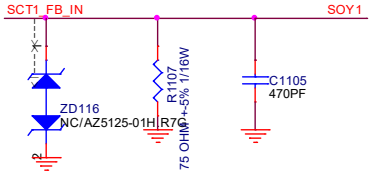

ADC/DAC

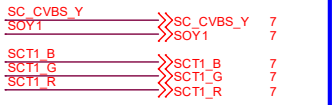

AUDIO /IF

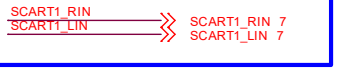

STB CONTORL

SCART Audio Input

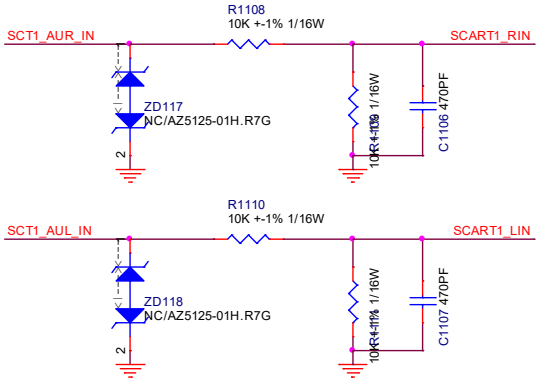

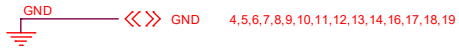

Function Select

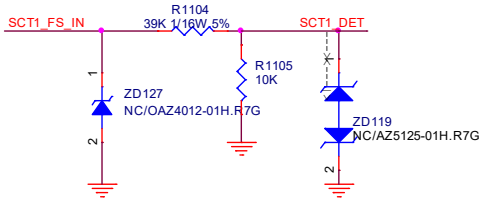

9-4-13 VGA

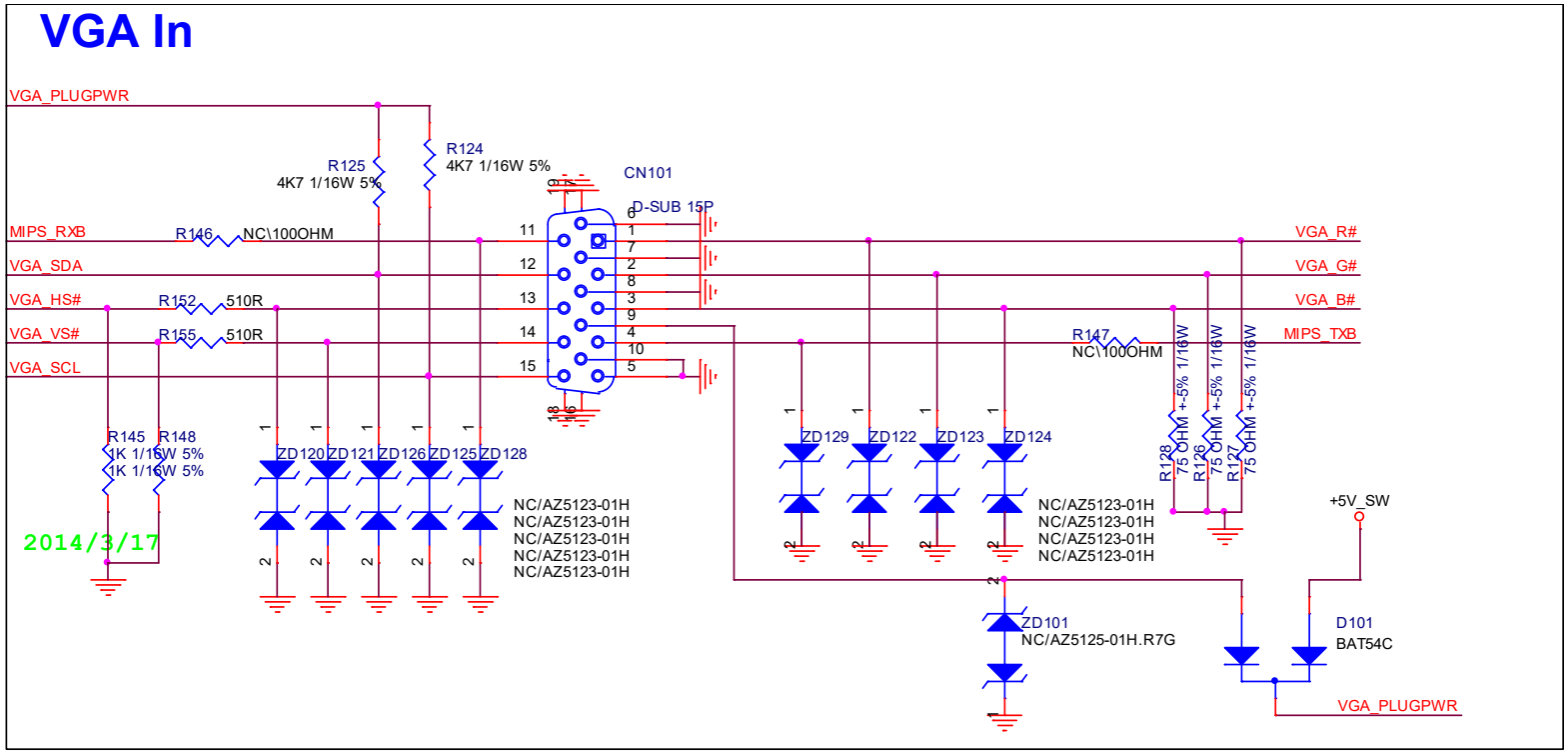

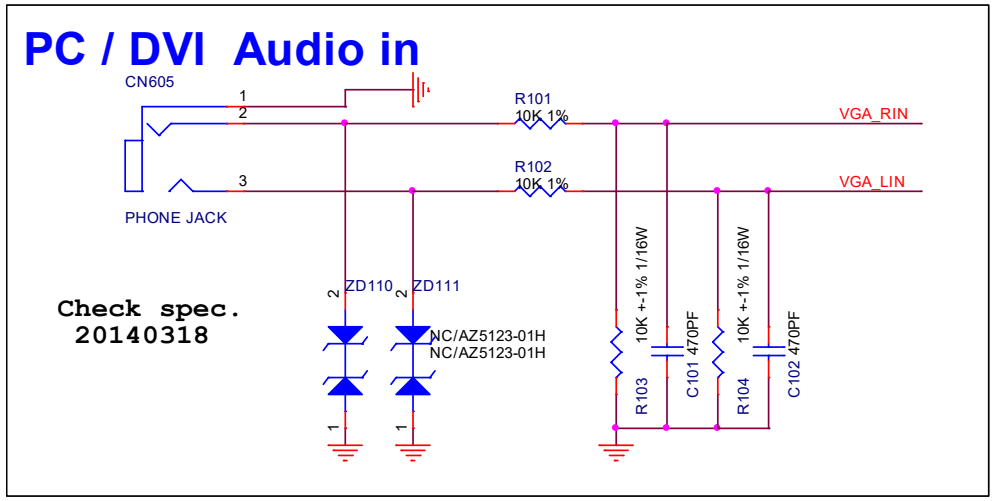

VGA_R#	VGA_R#	7
VGA_G#	VGA_G#	7
VGA_B#	VGA_B#	7
VGA_HS#	VGA_HS#	7
VGA_VS#	VGA_VS#	7
VGA_SDA	VGA_SDA	10
VGA_SCL	VGA_SCL	10
VGA_RIN	VGA_RIN	7
VGA_LIN	VGA_LIN	7
+5V_SW	+5V_SW	4,9,11,14,17,18,19
	GND	4,5,6,7,8,9,10,11,12,13,14,15,17,18,19
MIPS_RXB	MIPS_RXB	5,11,18
MIPS_TXB	MIPS_TXB	5,11,18

9-4-14 LVDS

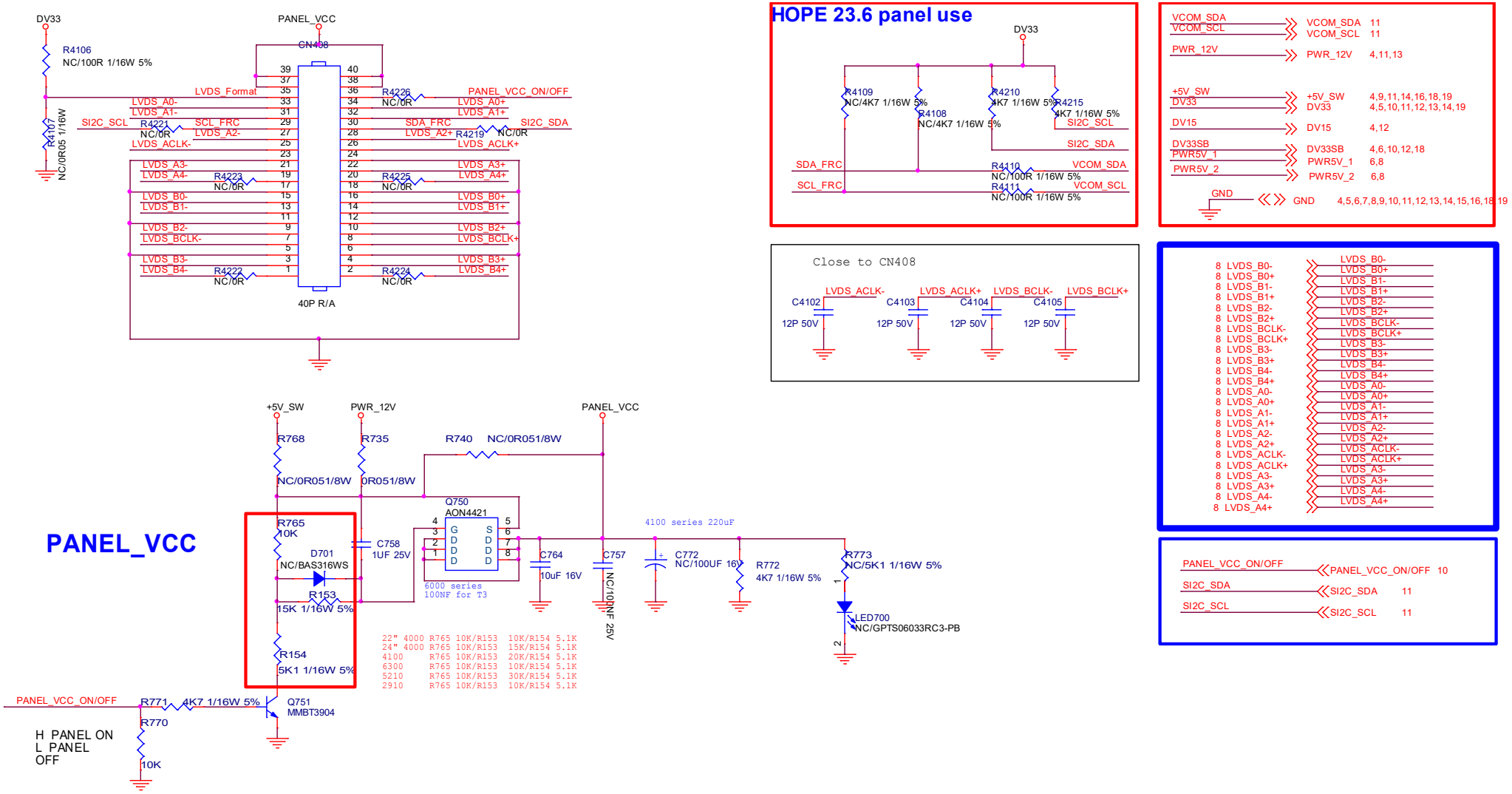
DV33
PANEL_VCC
CN408
R4106
NC/100R 1/16W 5%
R4107
NC/0R05 1/16W
LVDS_Format
R4226
NC/0R
PANEL_VCC_ON/OFF
LVDS_A0-
LVDS_A1-
LVDS_A0+
LVDS_A1+
SI2C_SCL
R4221
NC/0R
SCL_FRC
LVDS_A2-
SDA_FRC
LVDS_A2+
R4219
NC/0R
SI2C_SDA
LVDS_ACLK-
LVDS_ACLK+
LVDS_A3-
LVDS_A4-
R4223
NC/0R
R4225
NC/0R
LVDS_A3+
LVDS_A4+
LVDS_B0-
LVDS_B1-
LVDS_B0+
LVDS_B1+
LVDS_B2-
LVDS_BCLK-
LVDS_B2+
LVDS_BCLK+
LVDS_B3-
LVDS_B4-
R4222
NC/0R
R4224
NC/0R
LVDS_B3+
LVDS_B4+
40P R/A
HOPE 23.6 panel use
DV33
R4109
NC/4K7 1/16W 5%
R4108
NC/4K7 1/16W 5%
R4210
4K7 1/16W 5%
R4215
4K7 1/16W 5%
SI2C_SCL
SI2C_SDA
SDA_FRC
SCL_FRC
R4110
NC/100R 1/16W 5%
VCOM_SDA
R4111
NC/100R 1/16W 5%
VCOM_SCL
VCOM_SDA 11
VCOM_SCL 11
PWR_12V
PWR_12V 4,11,13
+5V_SW
+5V_SW 4,9,11,14,16,18,19
DV33
DV33 4,5,10,11,12,13,14,19
DV15
DV15 4,12
DV33SB
DV33SB 4,6,10,12,18
PWR5V_1
PWR5V_1 6,8
PWR5V_2
PWR5V_2 6,8
GND
GND 4,5,6,7,8,9,10,11,12,13,14,15,16,18,19
Close to CN408
LVDS_ACLK-
LVDS_ACLK+
LVDS_BCLK-
LVDS_BCLK+
C4102
C4103
C4104
C4105
12P 50V
8 LVDS_B0-
8 LVDS_B0+
8 LVDS_B1-
8 LVDS_B1+
8 LVDS_B2-
8 LVDS_B2+
8 LVDS_BCLK-
8 LVDS_BCLK+
8 LVDS_B3-
8 LVDS_B3+
8 LVDS_B4-
8 LVDS_B4+
8 LVDS_A0-
8 LVDS_A0+
8 LVDS_A1-
8 LVDS_A1+
8 LVDS_A2-
8 LVDS_A2+
8 LVDS_ACLK-
8 LVDS_ACLK+
8 LVDS_A3-
8 LVDS_A3+
8 LVDS_A4-
8 LVDS_A4+
PANEL_VCC_ON/OFF
PANEL_VCC_ON/OFF 10
SI2C_SDA
SI2C_SDA 11
SI2C_SCL
SI2C_SCL 11
+5V_SW
PWR_12V
PANEL_VCC
R768
NC/0R051/8W
R735
0R051/8W
R740
NC/0R051/8W
Q750
AON4421
PANEL_VCC
R765
10K
D701
NC/BAS316WS
R153
15K 1/16W 5%
R154
5K1 1/16W 5%
C758
1UF 25V
6000 series
100NF for T3
C764
10uF 16V
C757
NC/100NF 25V
4100 series 220uF
C772
NC/100UF 16V
R772
4K7 1/16W 5%
R773
NC/5K1 1/16W 5%
LED700
NC/GPTS06033RC3-PB
22" 4000 R765 10K/R153 10K/R154 5.1K
24" 4000 R765 10K/R153 15K/R154 5.1K
4100 R765 10K/R153 20K/R154 5.1K
6300 R765 10K/R153 10K/R154 5.1K
5210 R765 10K/R153 30K/R154 5.1K
2910 R765 10K/R153 10K/R154 5.1K
PANEL_VCC_ON/OFF
R771
4K7 1/16W 5%
Q751
MMBT3904
R770
10K
H PANEL ON
L PANEL
OFF

9-4-15 Ambilight

For BUH daughter board

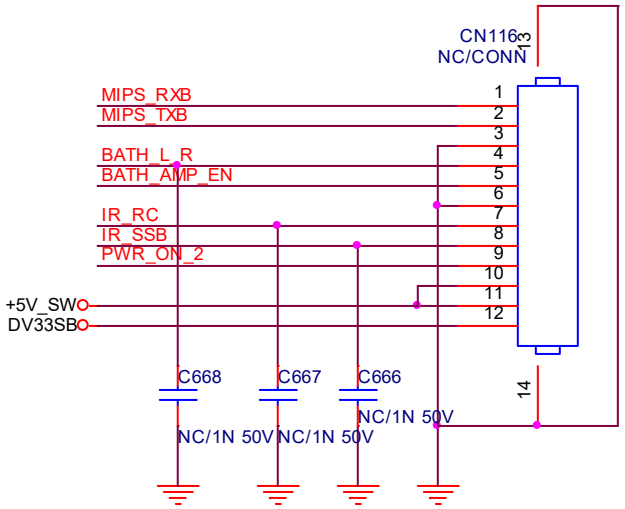

Bathroom SPK audio out for BUH

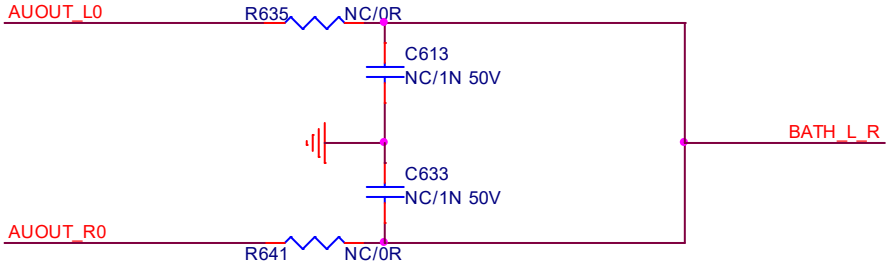

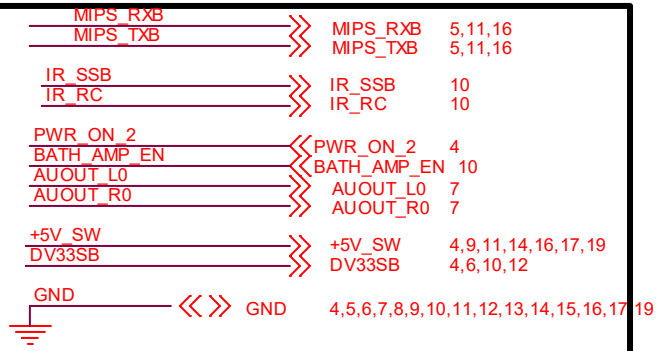

B/T FUNCTION

for EMI solution

NC , C640 , C641, C642 , C643

BT_LED trace (connector 狠)

糟 470pF bypass cap.

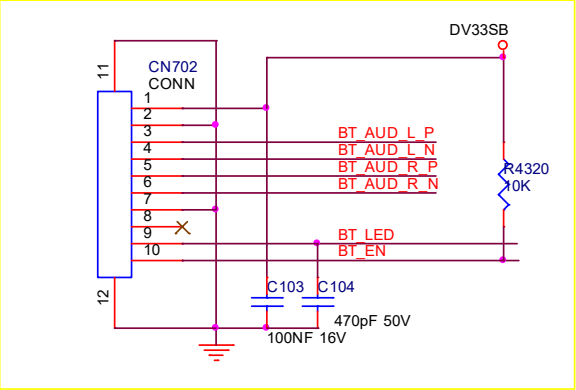

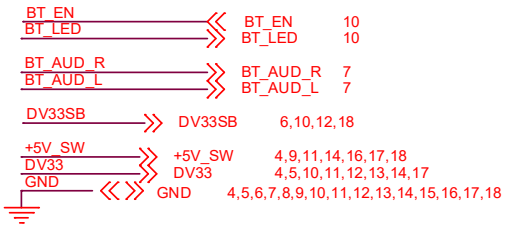

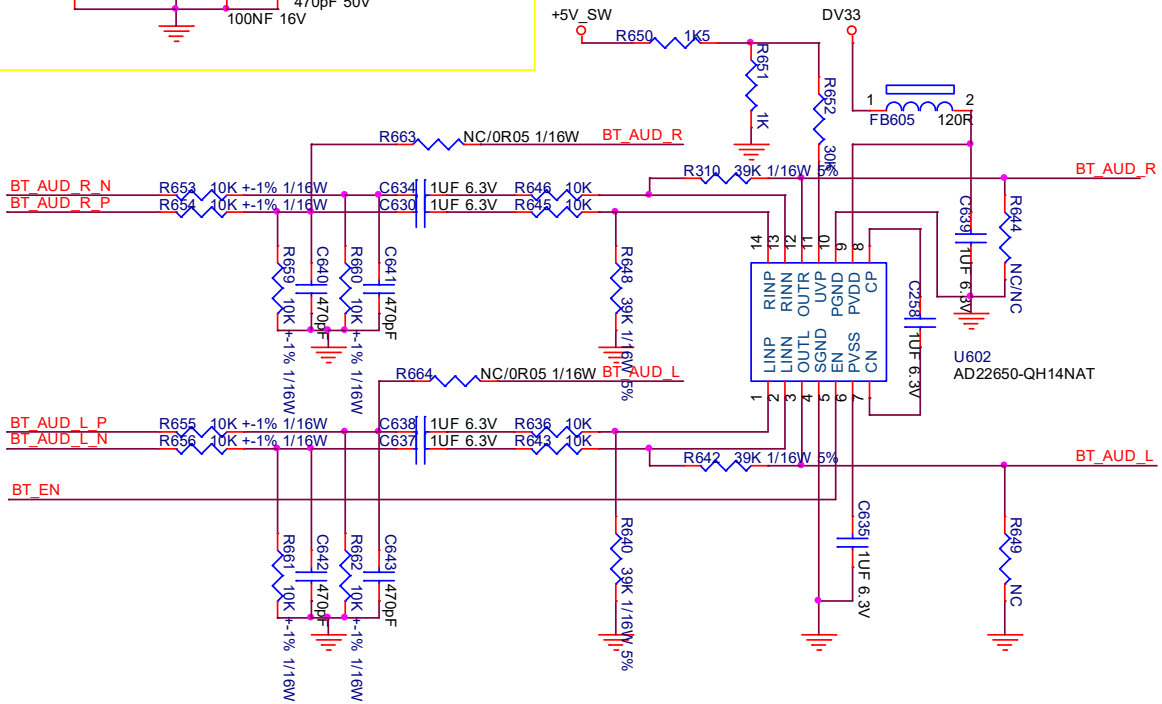

9.5 715G8576 IR/LED (For 5303/5403 Series)

9-5-1 IR LED

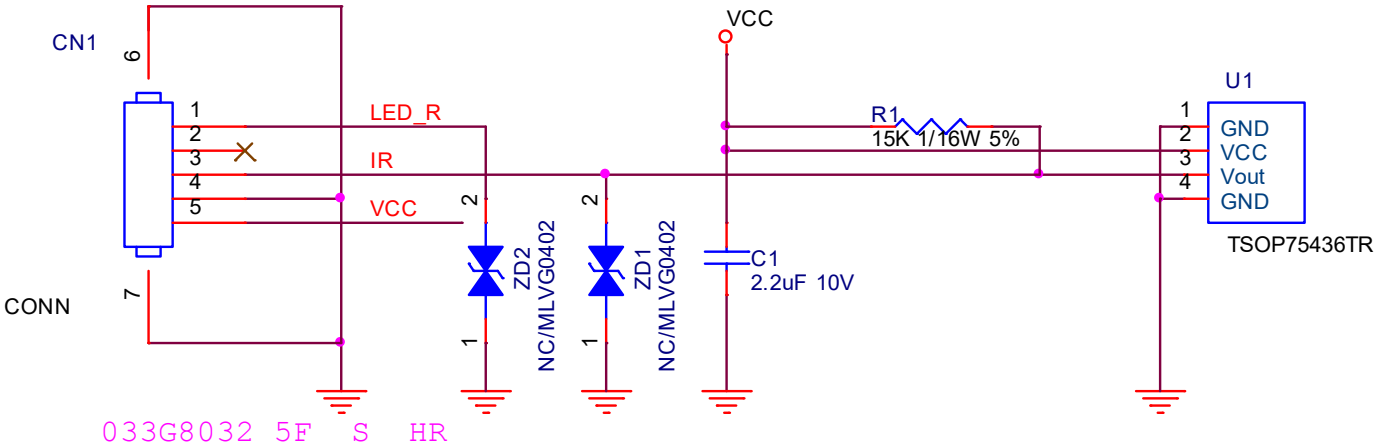

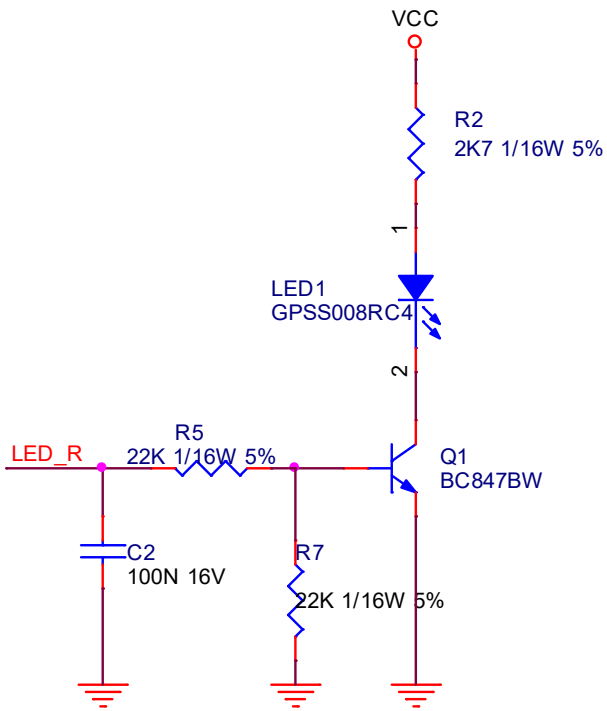

9.6 715G8009 IR/LED (For 5703 Series)

9-6-1 IR & LED & Light Sensor

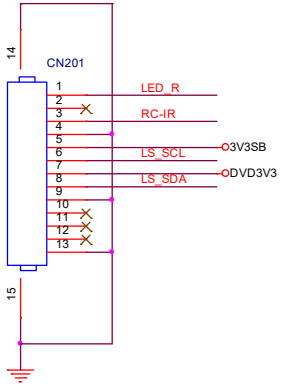

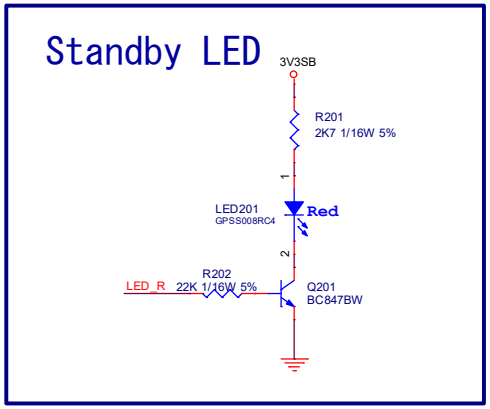

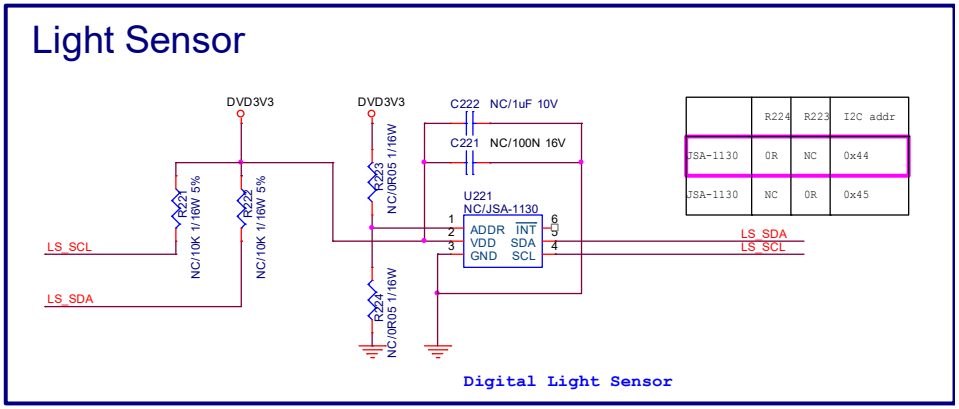

	R224	R223	I2C addr
JSA-1130	0R	NC	0x44
JSA-1130	NC	0R	0x45

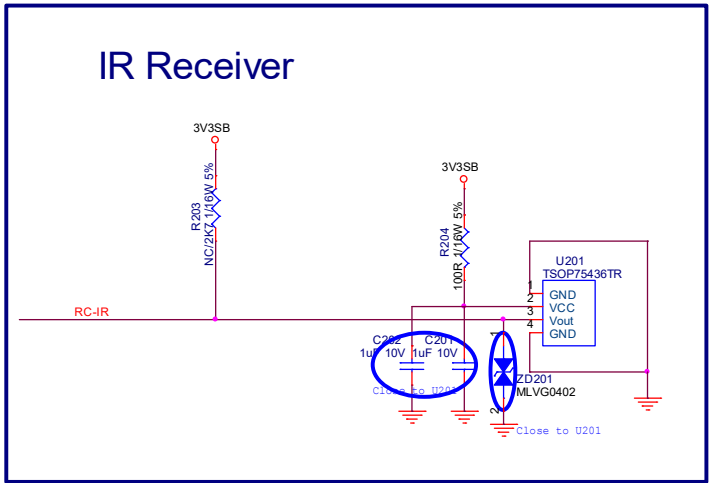

10. Styling Sheets

10.1 5303 series 22/24"

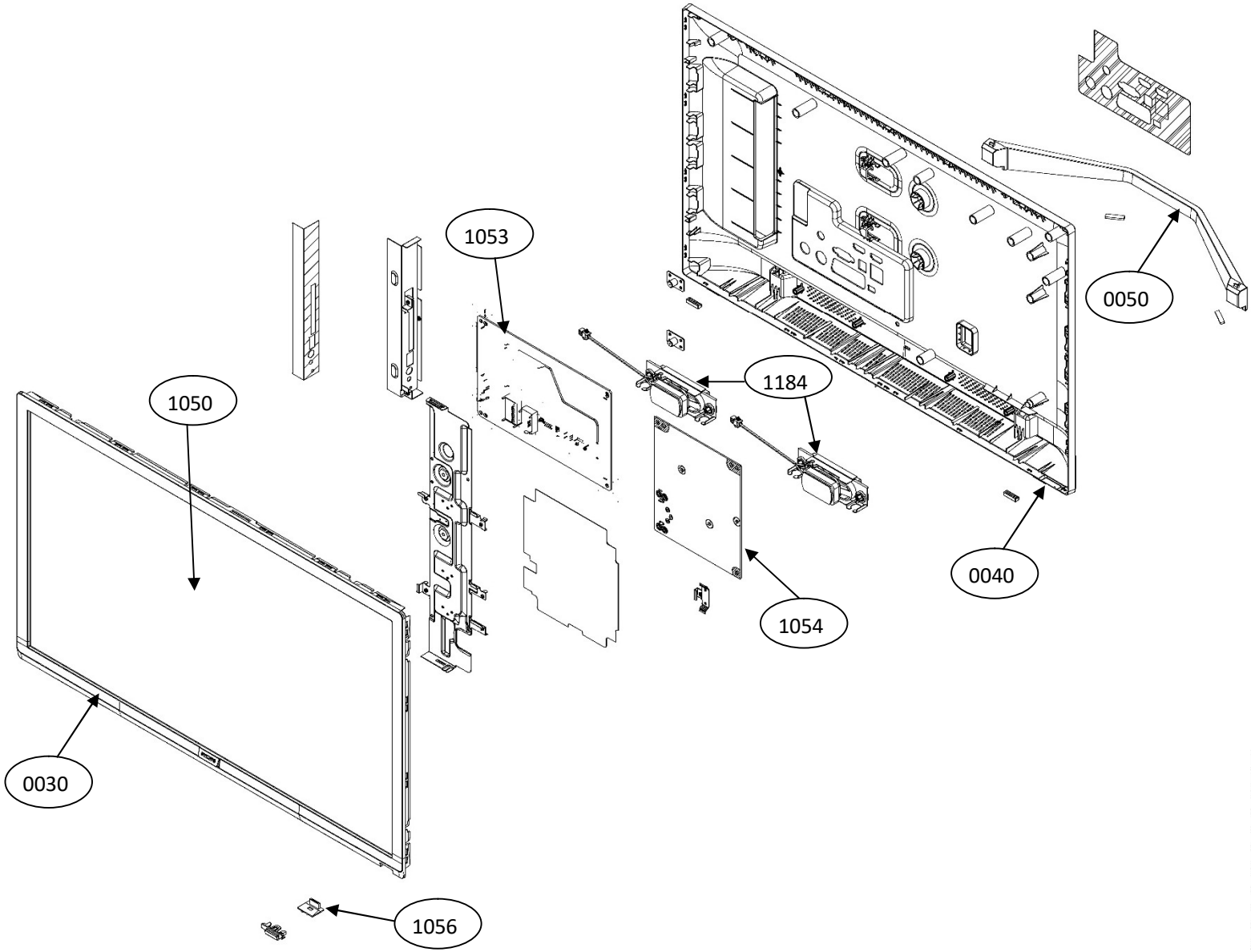

Pos NO.	Description	Remark
0030	BEZEL(Integrated with panel)	
0040	REAR_COVER	
0050	BASE ASS'Y	
1050	LCD PANEL	
1053	PANEL SSB	
1054	POWER BOARD	
1056	IR BOARD	
1176	REMOTE CONTROL	Not displayed
1184	SPEAKERS	

10.2 5403 series 22"

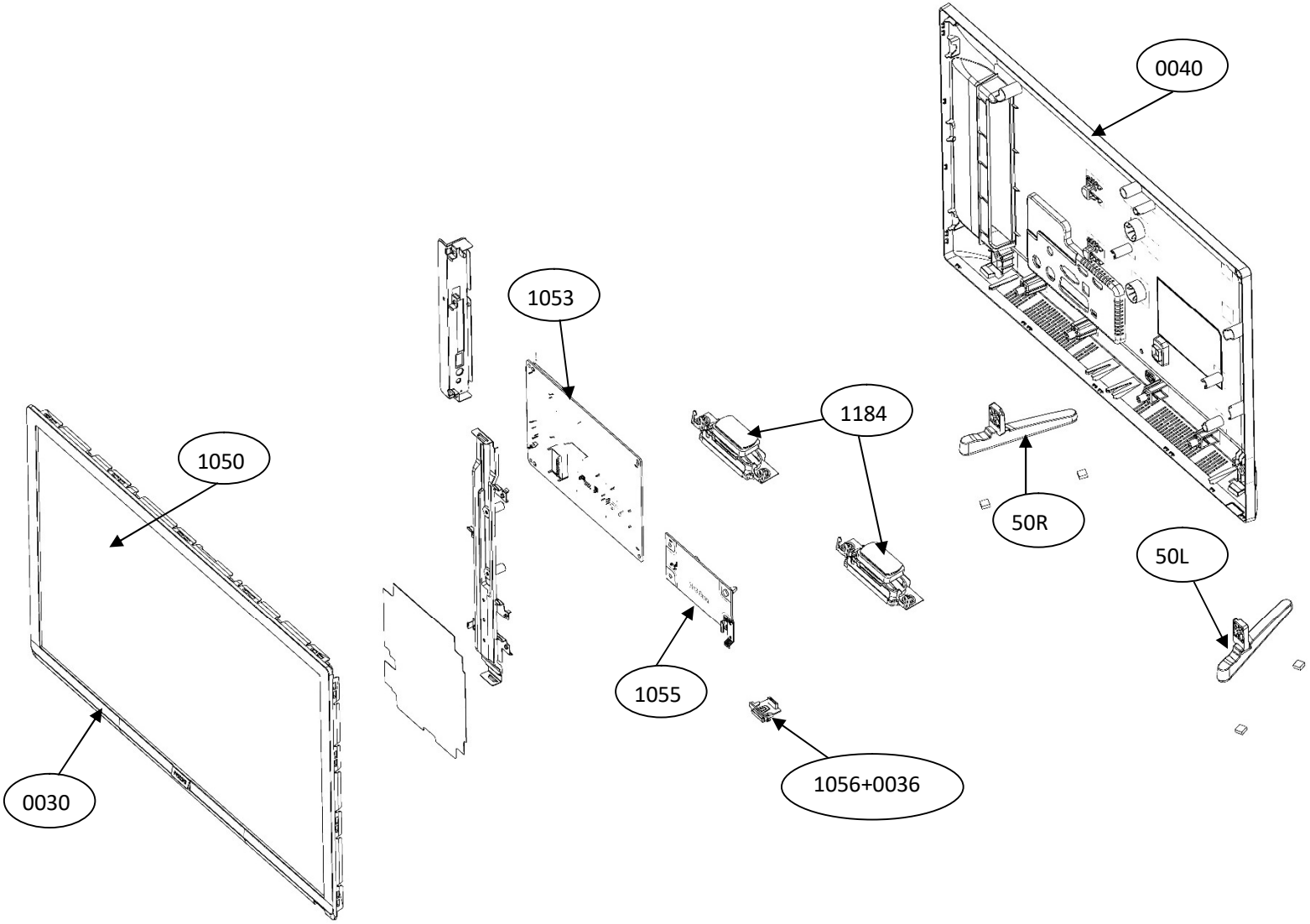

Pos NO.	Description	Remark
0030	BEZEL(Integrated with panel)	
0036	LENS_IR	
0040	REAR_COVER	
1050	LCD PANEL	
1053	PANEL SSB	
1055	Driver Board	
1056	IR BOARD	
1176	REMOTE CONTROL	Not displayed
1184	SPEAKERS	
50L	EDGE STAND – L	
50R	EDGE STAND – R	

10.3 5703 series 24"

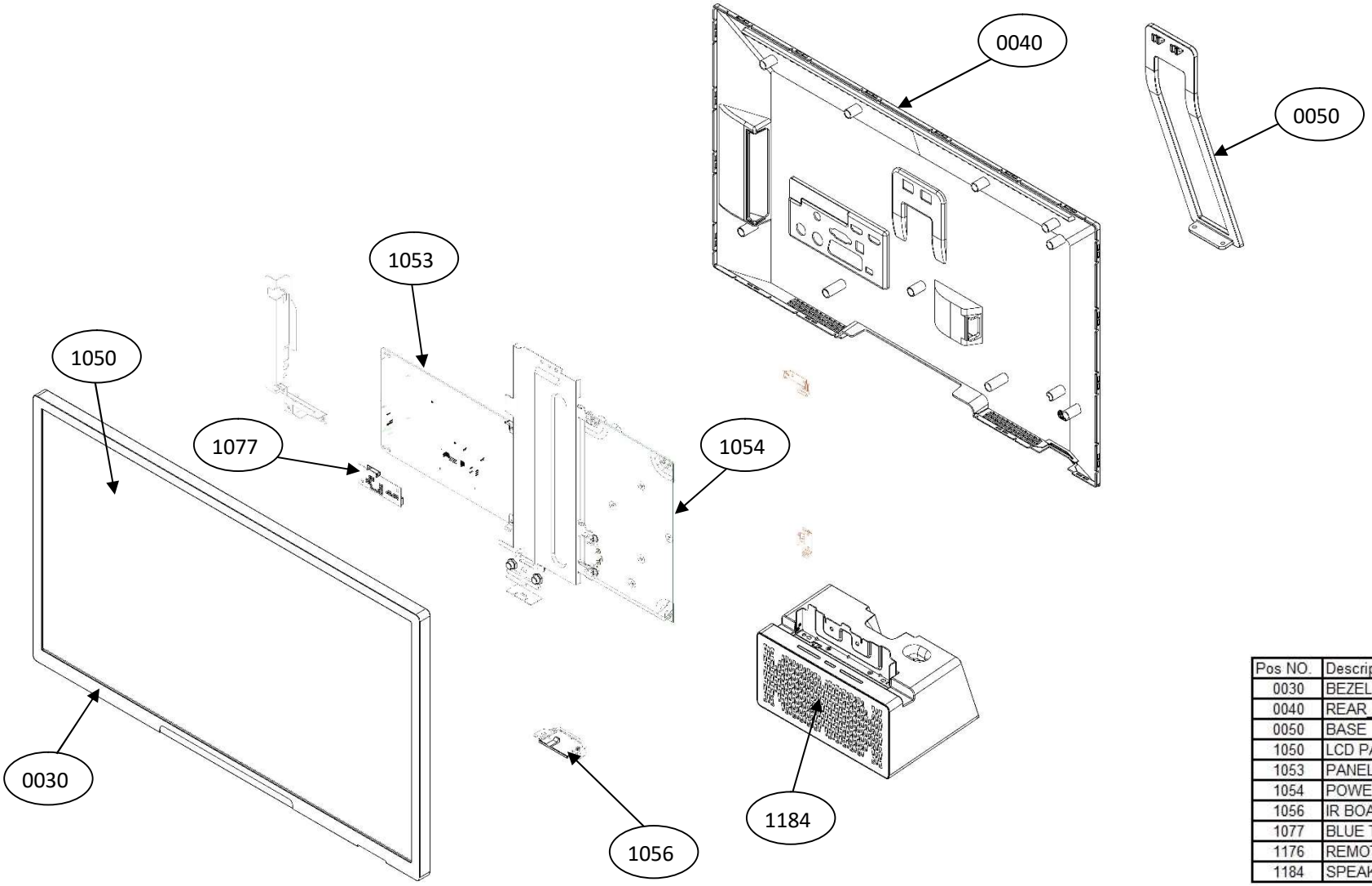

Pos NO.	Description	Remark
0030	BEZEL(Integrated with panel)	
0040	REAR_COVER	
0050	BASE	
1050	LCD PANEL	
1053	PANEL SSB	
1054	POWER BOARD	
1056	IR BOARD	
1077	BLUE TOOTH MODULE	
1176	REMOTE CONTROL	Not displayed
1184	SPEAKERS	